PAGE01 ALL ANTs	PAGE31 SDM Control	PAGE01 ALL ANTs
PAGE02 Reserved(for ANT)	PAGE32 SDM GPIO-1	PAGE01 ALL ANTs
PAGE03 PRX	PAGE33 SDM GPIO-2	PAGE01 ALL ANTs
PAGE04 DRX	PAGE34 SDM MIPI	PAGE01 ALL ANTs
PAGE05 Reserved(for PRX/DRX)	PAGE35 Reserved(for MIPI)	PAGE01 ALL ANTs
PAGE06 PA1	PAGE36 SDM855 RF INTF	PAGE01 ALL ANTs
PAGE07 PA2	PAGE37 SDM PWR1	PAGE01 ALL ANTs
PAGE08 Reserverd（for RF PA)	PAGE38 SDM PWR2	PAGE01 ALL ANTs
PAGE09 RF DC-DC	PAGE39 SDM PWR3	PAGE01 ALL ANTs
PAGE10 QLN PRX	PAGE40 SDM PWR4	PAGE01 ALL ANTs
PAGE11 QLN DRX	PAGE41 SDM GND	PAGE01 ALL ANTs
PAGE12 Reserverd(for LAN)	PAGE42 PM855 XO&CTRL	PAGE01 ALL ANTs
PAGE13 WTR Interface	PAGE43 PM855 BUCK CONVERTER1	PAGE01 ALL ANTs
PAGE14 WTR PWR	PAGE44 PM855 BUCK CONVERTER2	PAGE01 ALL ANTs
PAGE15 Reserverd(for WTR)	PAGE45 PM855 LDOs	PAGE01 ALL ANTs
PAGE16 Reserved(for 5G-sub 6G)	PAGE46 PM855 GPIO&GND	PAGE01 ALL ANTs
PAGE17 Reserved(for 5G-MM Wave)	PAGE47 PM855A CTRL&GND	PAGE01 ALL ANTs
PAGE18 Reserved(for 5G-WTR-I)	PAGE48 PM855A BUCK CONVERTER1	PAGE01 ALL ANTs
PAGE19 Reserved(for 5G-WTR-P)	PAGE49 PM855A BUCK CONVERTER2	PAGE01 ALL ANTs
PAGE20 Reserved(for 5G-DC-DC)	PAGE50 PM855A AMOLED&BOB&FLASH	PAGE01 ALL ANTs
PAGE21 Reserved(for 5G-OTHERS)	PAGE51 PM855A LDOs	PAGE01 ALL ANTs
PAGE22 NFC	PAGE52 PM855B CTRL&GND	PAGE01 ALL ANTs
PAGE23 GPS	PAGE53 PM855B HAPTIC&OTG	PAGE01 ALL ANTs
PAGE24 WIFI Interface	PAGE54 PM855B CHARGER	PAGE01 ALL ANTs
PAGE25 WIFI FEM	PAGE55 SMB1390&WL POWER	PAGE01 ALL ANTs
PAGE26 WIFI Decouping		
PAGE27 Reserved(for 11ad/11ax)		
PAGE28 Reserved(for 11ad/11ax)		
PAGE29 Reserved(for Digital FM)		
PAGE30 Reserved(for Analog FM)		

Title	F1 MAIN	
Size A4	Document Number CONTENT	
Date: Monday, July 29, 2019		Sheet

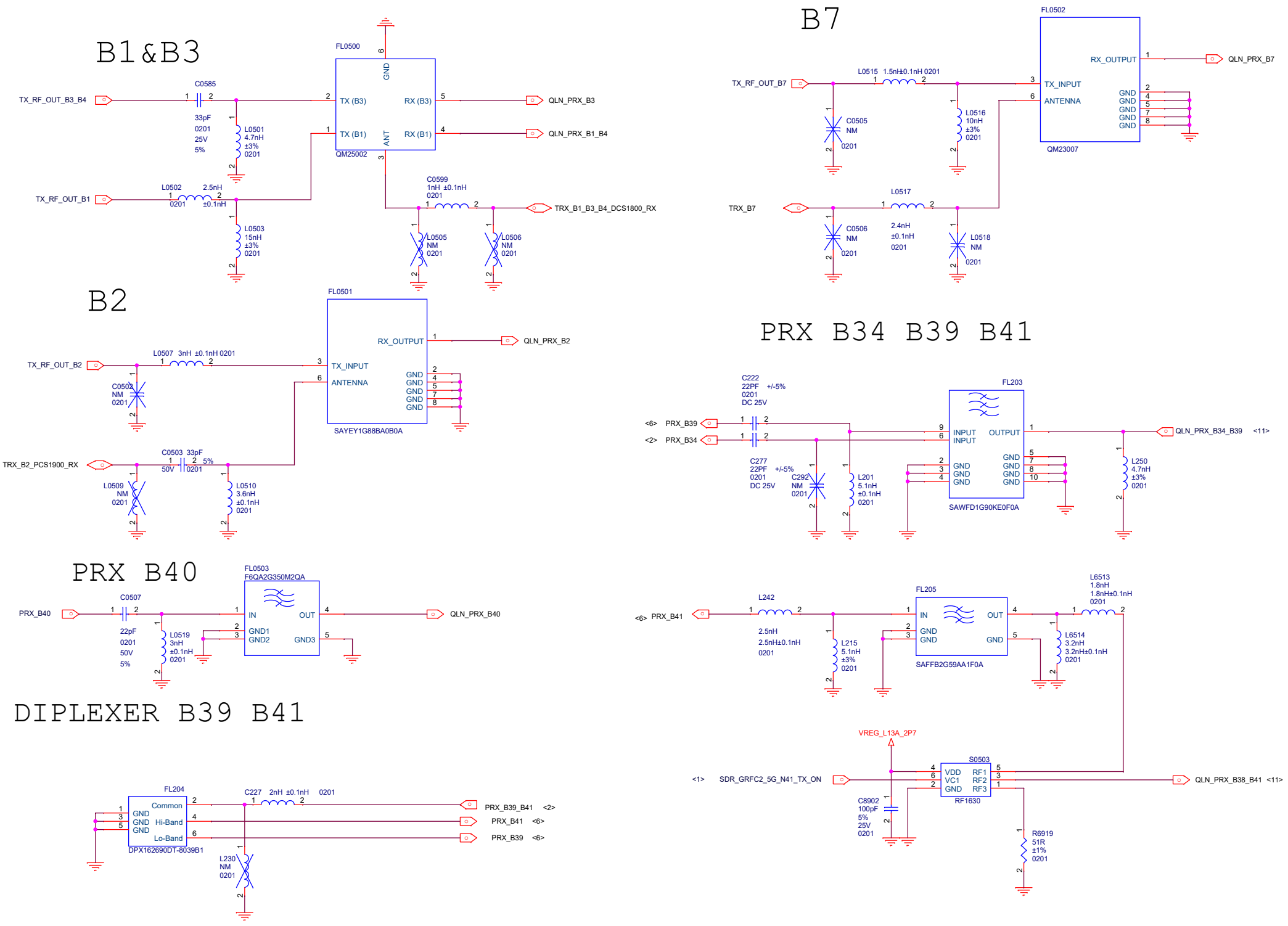
B1&B3
FL0500
QM25002
TX_RF_OUT_B3_B4
C0585
33pF
0201
25V
5%
L0501
4.7nH
±3%
0201
TX_RF_OUT_B1
L0502
2.5nH
0201
±0.1nH
L0503
15nH
±3%
0201
TX (B3)
RX (B3)
TX (B1)
RX (B1)
GND
ANT
QLN_PRX_B3
QLN_PRX_B1_B4
C0599
1nH ±0.1nH
0201
TRX_B1_B3_B4_DCS1800_RX
L0505
NM
0201
L0506
NM
0201
B7
FL0502
QM23007
TX_RF_OUT_B7
L0515 1.5nH±0.1nH 0201
C0505
NM
0201
L0516
10nH
±3%
0201
TX_INPUT
ANTENNA
RX_OUTPUT
GND
QLN_PRX_B7
TRX_B7
L0517
2.4nH
±0.1nH
0201
C0506
NM
0201
L0518
NM
0201
B2
FL0501
SAYEY1G88BA0B0A
TX_RF_OUT_B2
L0507 3nH ±0.1nH 0201
C0502
NM
0201
TX_INPUT
ANTENNA
RX_OUTPUT
GND
QLN_PRX_B2
TRX_B2_PCS1900_RX
C0503 33pF
50V 0201 5%
L0509
NM
0201
L0510
3.6nH
±0.1nH
0201
PRX B34 B39 B41
FL203
SAWFD1G90KE0F0A
C222
22PF +/-5%
0201
DC 25V
<6> PRX_B39
<2> PRX_B34
C277
22PF +/-5%
0201
DC 25V
C292
NM
0201
L201
5.1nH
±0.1nH
0201
INPUT
INPUT
OUTPUT
GND
QLN_PRX_B34_B39 <11>
L250
4.7nH
±3%
0201
PRX B40
FL0503
F6QA2G350M2QA
PRX_B40
C0507
22pF
0201
50V
5%
L0519
3nH
±0.1nH
0201
IN
OUT
GND1
GND2
GND3
QLN_PRX_B40
<6> PRX_B41
L242
2.5nH
2.5nH±0.1nH
0201
L215
5.1nH
±3%
0201
FL205
SAFFB2G59AA1F0A
IN
OUT
GND
L6513
1.8nH
1.8nH±0.1nH
0201
L6514
3.2nH
3.2nH±0.1nH
0201
DIPLEXER B39 B41
FL204
DPX162690DT-8039B1
Common
Hi-Band
Lo-Band
GND
C227 2nH ±0.1nH 0201
L230
NM
0201
PRX_B39_B41 <2>
PRX_B41 <6>
PRX_B39 <6>
VREG_L13A_2P7
S0503
RF1630
VDD
VC1
GND
RF1
RF2
RF3
<1> SDR_GRFC2_5G_N41_TX_ON
C8902
100pF
5%
25V
0201
R6919
51R
±1%
0201
QLN_PRX_B38_B41 <11>

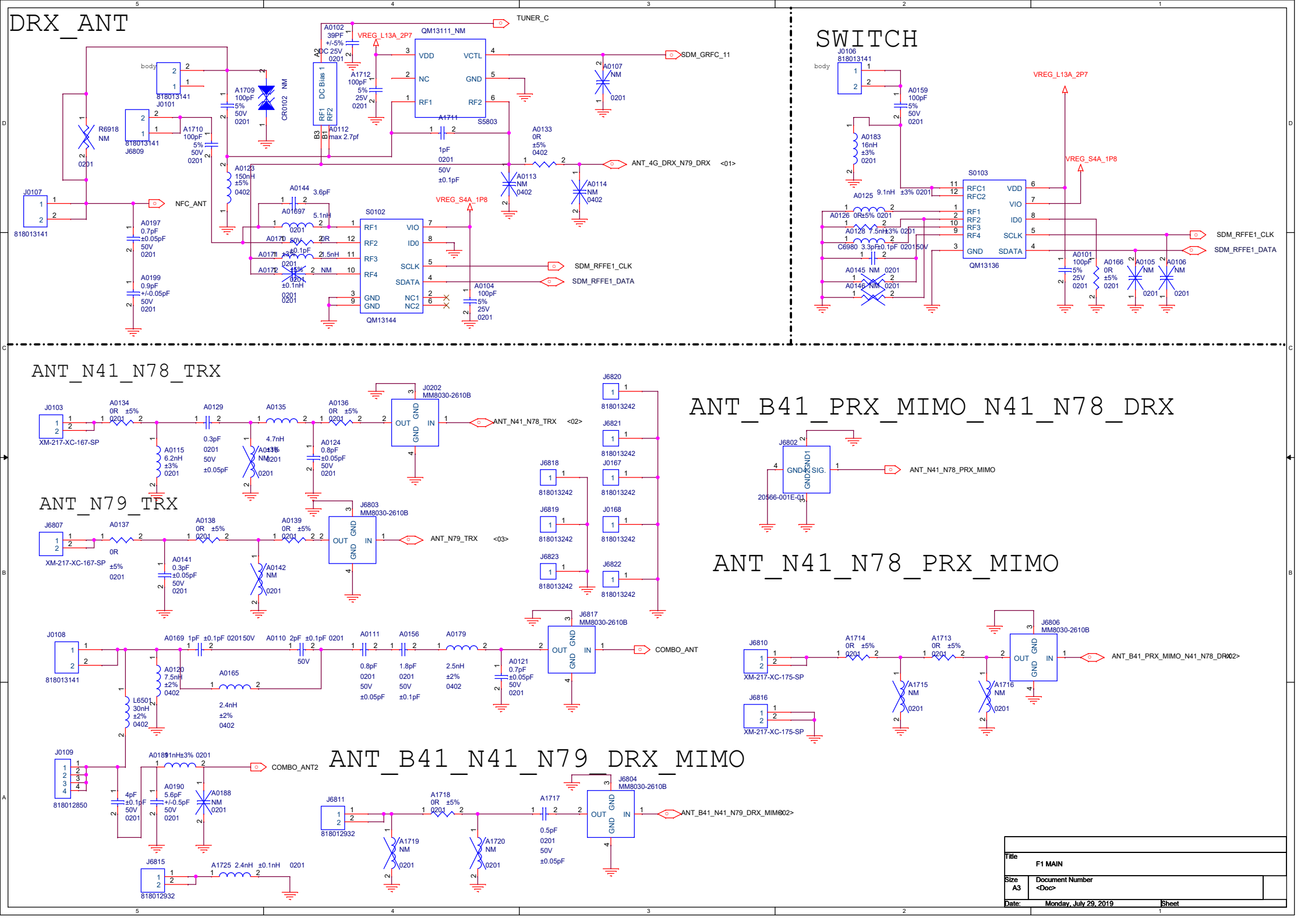
DRX_ANT
TUNER_C
QM13111_NM
VDD
VCTL
NC
GND
RF1
RF2
S5803
SDM_GRFC_11
A0102
39PF
+/-5%
DC 25V
0201
VREG_L13A_2P7
A1712
100pF
5%
25V
0201
A0107
NM
0201
DC Bias 1
A0112
max 2.7pf
A1711
1pF
0201
50V
±0.1pF
A0133
0R
±5%
0402
ANT_4G_DRX_N79_DRX
<01>
A0113
NM
0402
A0114
NM
0402
body
818013141
J0101
A1709
100pF
5%
50V
0201
CR0102
NM
R6918
NM
0201
J6809
A1710
100pF
5%
50V
0201
A0123
150nH
±5%
0402
J0107
NFC_ANT
A0197
0.7pF
±0.05pF
50V
0201
A0199
0.9pF
+/-0.05pF
50V
0201
A0144
3.6pF
A01697
5.1nH
0201
A0170
50V
2.0R
A0171
±0.1pF
2.5nH
0201
A0172
±5%
0201
NM
±0.1nH
0201
0201
S0102
RF1
RF2
RF3
RF4
GND
GND
VIO
ID0
SCLK
SDATA
NC1
NC2
QM13144
VREG_S4A_1P8
SDM_RFFE1_CLK
SDM_RFFE1_DATA
A0104
100pF
5%
25V
0201
SWITCH
J0106
818013141
body
A0159
100pF
5%
50V
0201
VREG_L13A_2P7
A0183
16nH
±3%
0201
VREG_S4A_1P8
S0103
A0125
9.1nH
±3%
0201
A0126
0R±5%
0201
A0128
7.5nH
±3%
0201
C6980
3.3pF
±0.1pF
0201
50V
A0145
NM
0201
A0146
NM
0201
RFC1
RFC2
RF1
RF2
RF3
RF4
GND
VDD
VIO
ID0
SCLK
SDATA
QM13136
SDM_RFFE1_CLK
SDM_RFFE1_DATA
A0101
100pF
5%
25V
0201
A0166
0R
±5%
0201
A0105
NM
0201
A0106
NM
0201
ANT_N41_N78_TRX
J0103
XM-217-XC-167-SP
A0134
0R
±5%
0201
A0129
0.3pF
0201
50V
±0.05pF
A0135
4.7nH
A0115
6.2nH
±3%
0201
A0124
0.8pF
±0.05pF
50V
0201
A0136
0R
±5%
0201
J0202
MM8030-2610B
OUT
GND
GND
IN
ANT_N41_N78_TRX
<02>
J6820
818013242
J6821
818013242
J6818
818013242
J0167
818013242
J6819
818013242
J0168
818013242
J6823
818013242
J6822
818013242
ANT_N79_TRX
J6807
XM-217-XC-167-SP
A0137
0R
±5%
0201
A0138
0R
±5%
0201
A0141
0.3pF
±0.05pF
50V
0201
A0139
0R
±5%
0201
A0142
NM
0201
J6803
MM8030-2610B
ANT_N79_TRX
<03>
ANT_B41_PRX_MIMO_N41_N78_DRX
J6802
20566-001E-01
GND
GND
SIG.
ANT_N41_N78_PRX_MIMO
ANT_N41_N78_PRX_MIMO
J0108
818013141
A0169
1pF
±0.1pF
0201
50V
A0110
2pF
±0.1pF
0201
50V
A0111
0.8pF
0201
50V
±0.05pF
A0156
1.8pF
0201
50V
±0.1pF
A0179
2.5nH
±2%
0402
A0120
7.5nH
±2%
0402
A0165
2.4nH
±2%
0402
L6501
30nH
±2%
0402
A0121
0.7pF
±0.05pF
50V
0201
J6817
MM8030-2610B
COMBO_ANT
J6810
XM-217-XC-175-SP
A1714
0R
±5%
0201
A1713
0R
±5%
0201
A1715
NM
0201
A1716
NM
0201
J6806
MM8030-2610B
ANT_B41_PRX_MIMO_N41_N78_DRX
<02>
J6816
XM-217-XC-175-SP
J0109
818012850
A0189
1nH
±3%
0201
COMBO_ANT2
4pF
±0.1pF
50V
0201
A0190
5.6pF
+/-0.5pF
50V
0201
A0188
NM
0201
ANT_B41_N41_N79_DRX_MIMO
J6811
818012932
A1718
0R
±5%
0201
A1717
0.5pF
0201
50V
±0.05pF
A1719
NM
0201
A1720
NM
0201
J6804
MM8030-2610B
ANT_B41_N41_N79_DRX_MIMO
<02>
J6815
818012932
A1725
2.4nH
±0.1nH
0201
Title
F1 MAIN
Size
A3
Document Number
<Doc>
Date:
Monday, July 29, 2019
Sheet

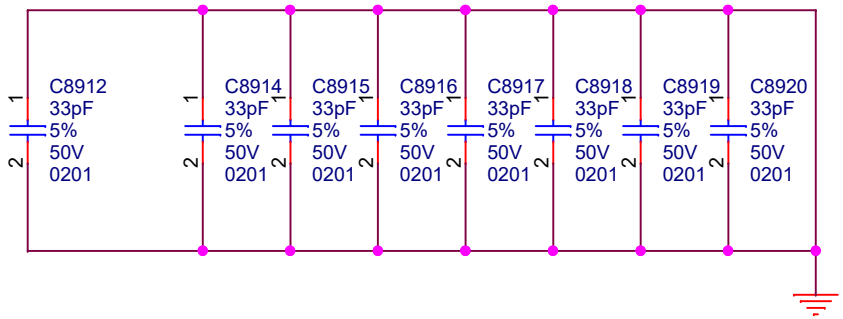

Title	<Title>	
Size A	Document Number <Doc>	
Date: Monday, July 29, 2019	Sheet 1 of 1	

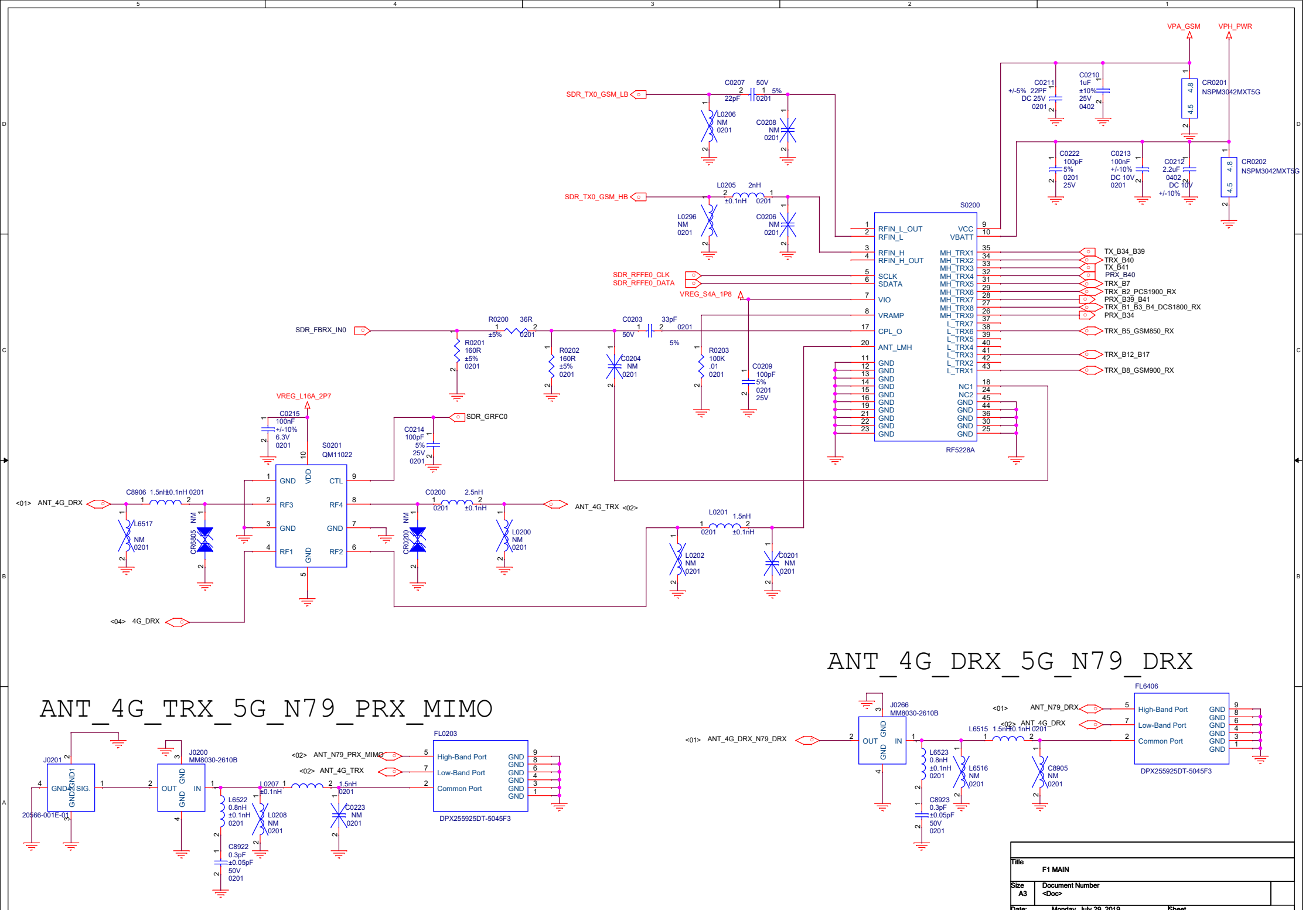
ANT_4G_TRX_5G_N79_PRX_MIMO
ANT_4G_DRX_5G_N79_DRX
S0200
RF5228A
S0201
QM11022
J0200
MM8030-2610B
J0201
20566-001E-01
FL0203
DPX255925DT-5045F3
J0266
MM8030-2610B
FL6406
DPX255925DT-5045F3
VPA_GSM
VPH_PWR
VREG_S4A_1P8
VREG_L16A_2P7
SDR_TX0_GSM_LB
SDR_TX0_GSM_HB
SDR_RFFE0_CLK
SDR_RFFE0_DATA
SDR_FBRX_IN0
SDR_GRFC0
ANT_4G_DRX
ANT_4G_TRX
4G_DRX
ANT_N79_PRX_MIMO
ANT_N79_DRX
ANT_4G_DRX_N79_DRX
Title
F1 MAIN
Size
A3
Document Number
Date:
Monday, July 29, 2019
Sheet

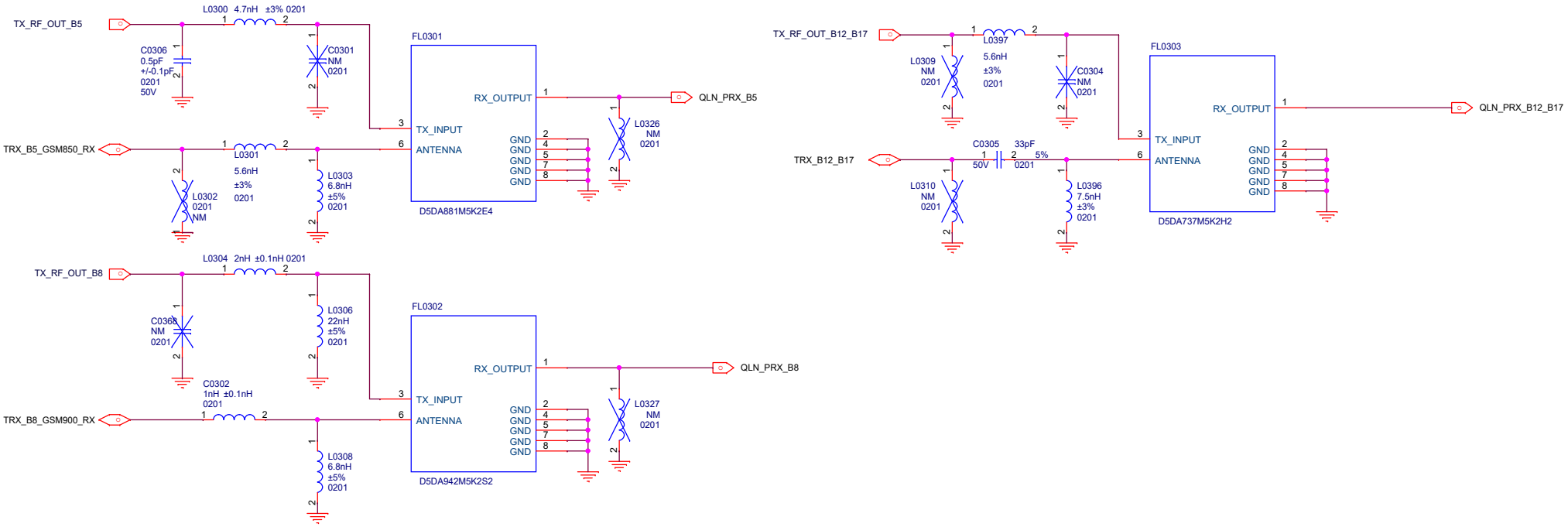

Title	F1 MAIN
Size A3	Document Number <Doc>
Date: Monday, July 29, 2019	Sheet

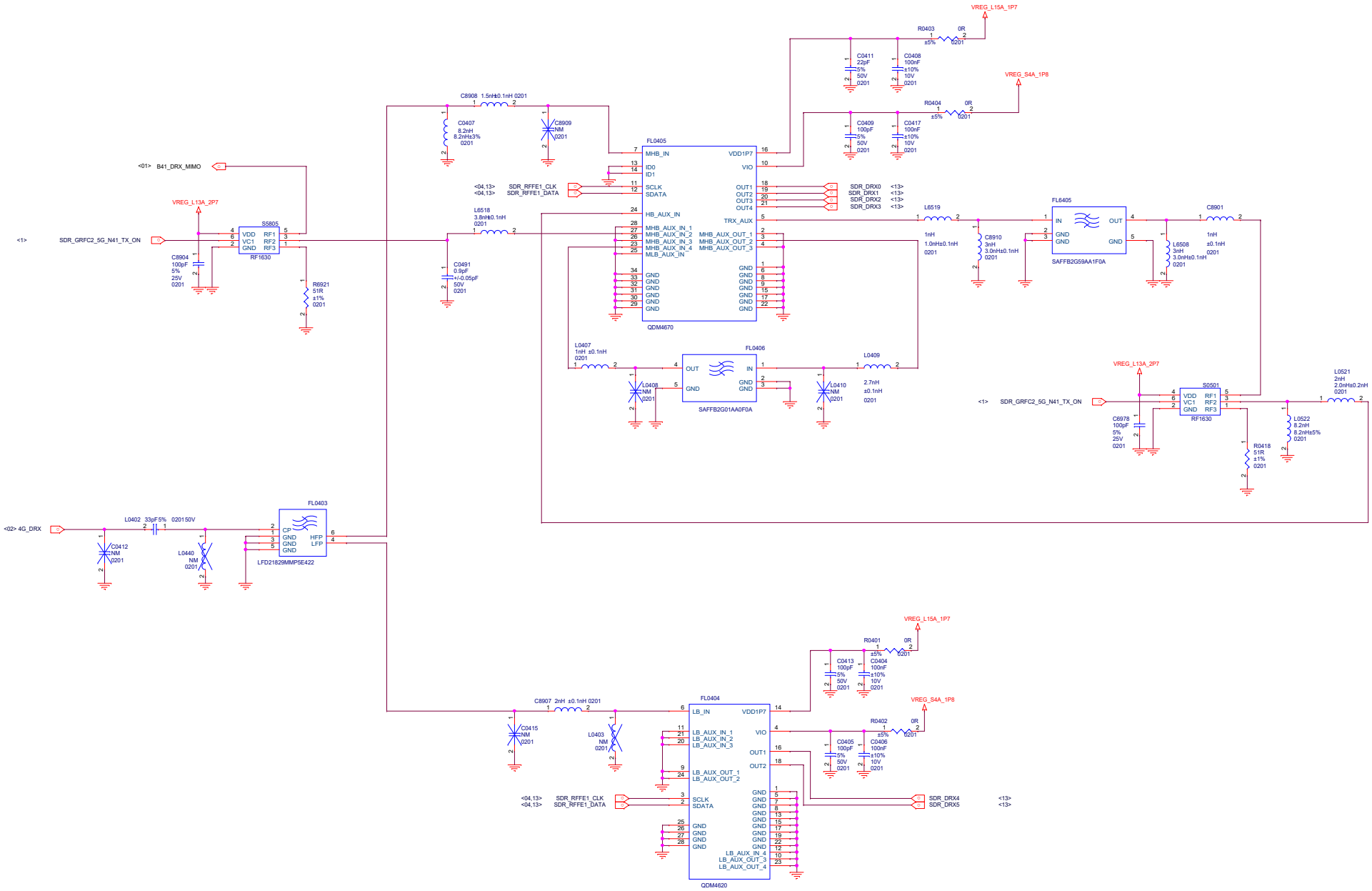

Title	F1 MAIN
Size A2	Document Number <Doc>
Date:	Monday, July 29, 2019

MMMB PA

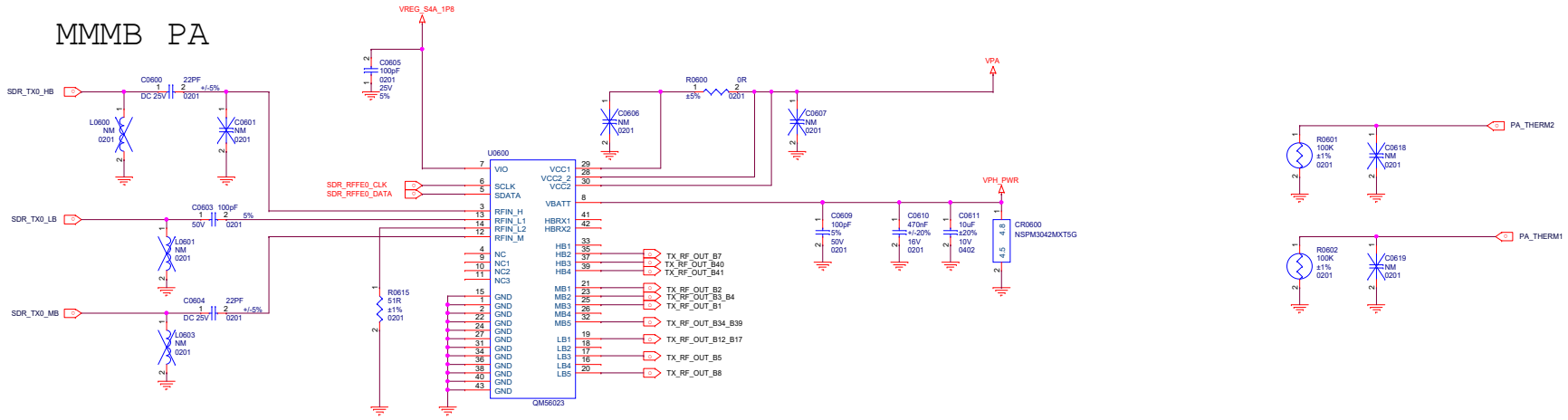

TX B34_B39

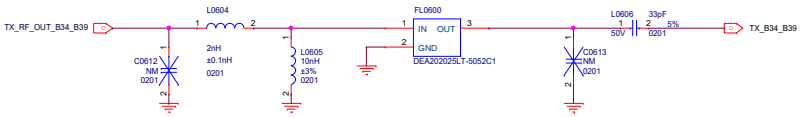

TX B41

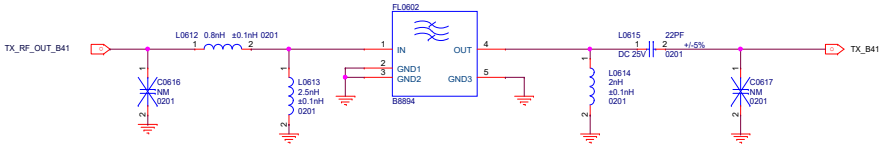

TX B40

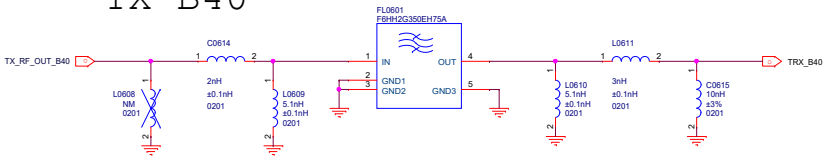

Title	F1 MAIN
Size A2	Document Number PA1
Date:	Monday, July 29, 2019

Title	F1 MAIN
Size A3	Document Number PA2
Date: Monday, July 29, 2019	Sheet

Title	F1 MAIN
Size A3	Document Number Reserved(for PA)
Date: Monday, July 29, 2019	Sheet

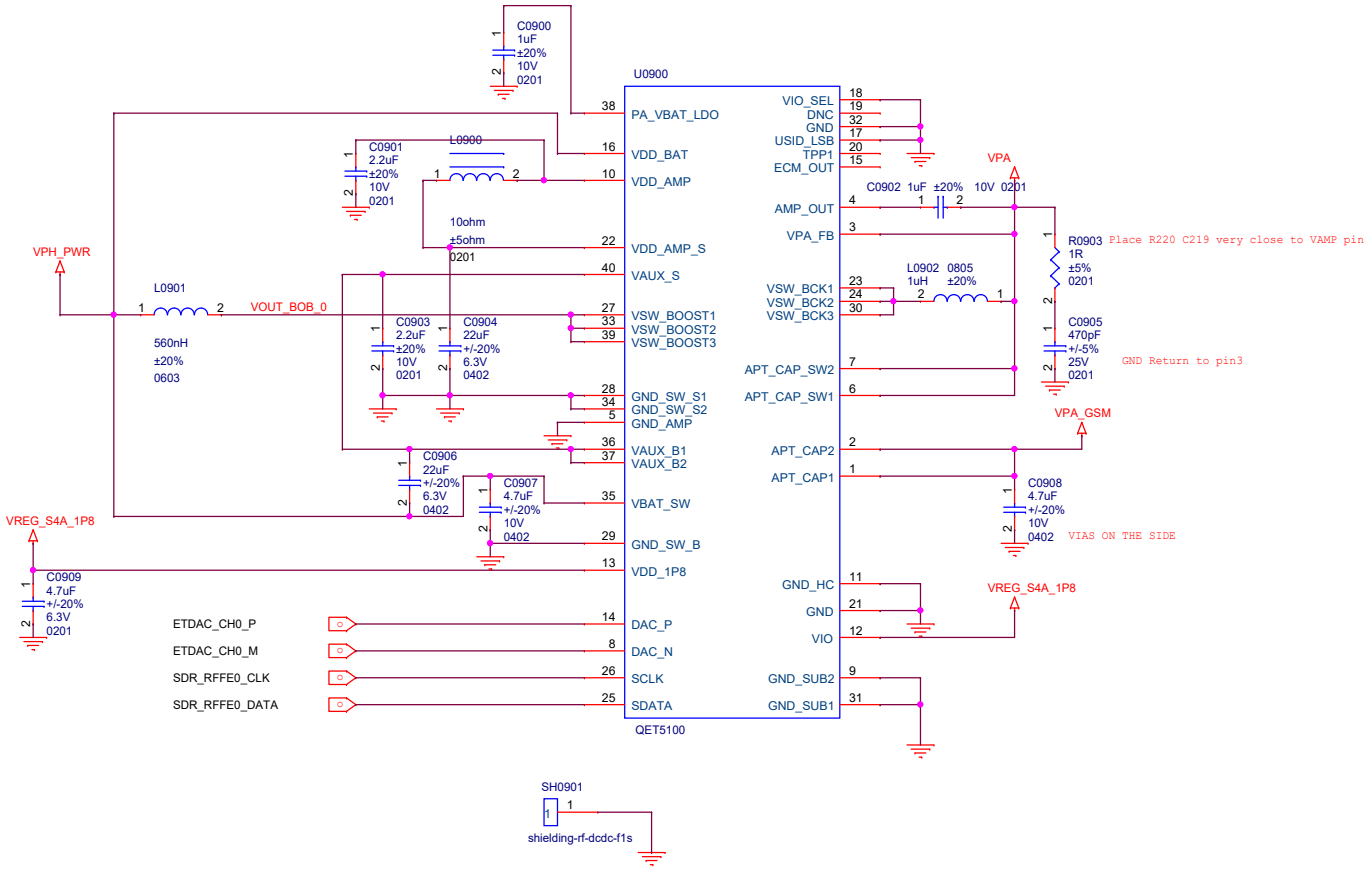

Title	F1 MAIN
Size A3	Document Number RF DC-DC
Date: Monday, July 29, 2019	Sheet

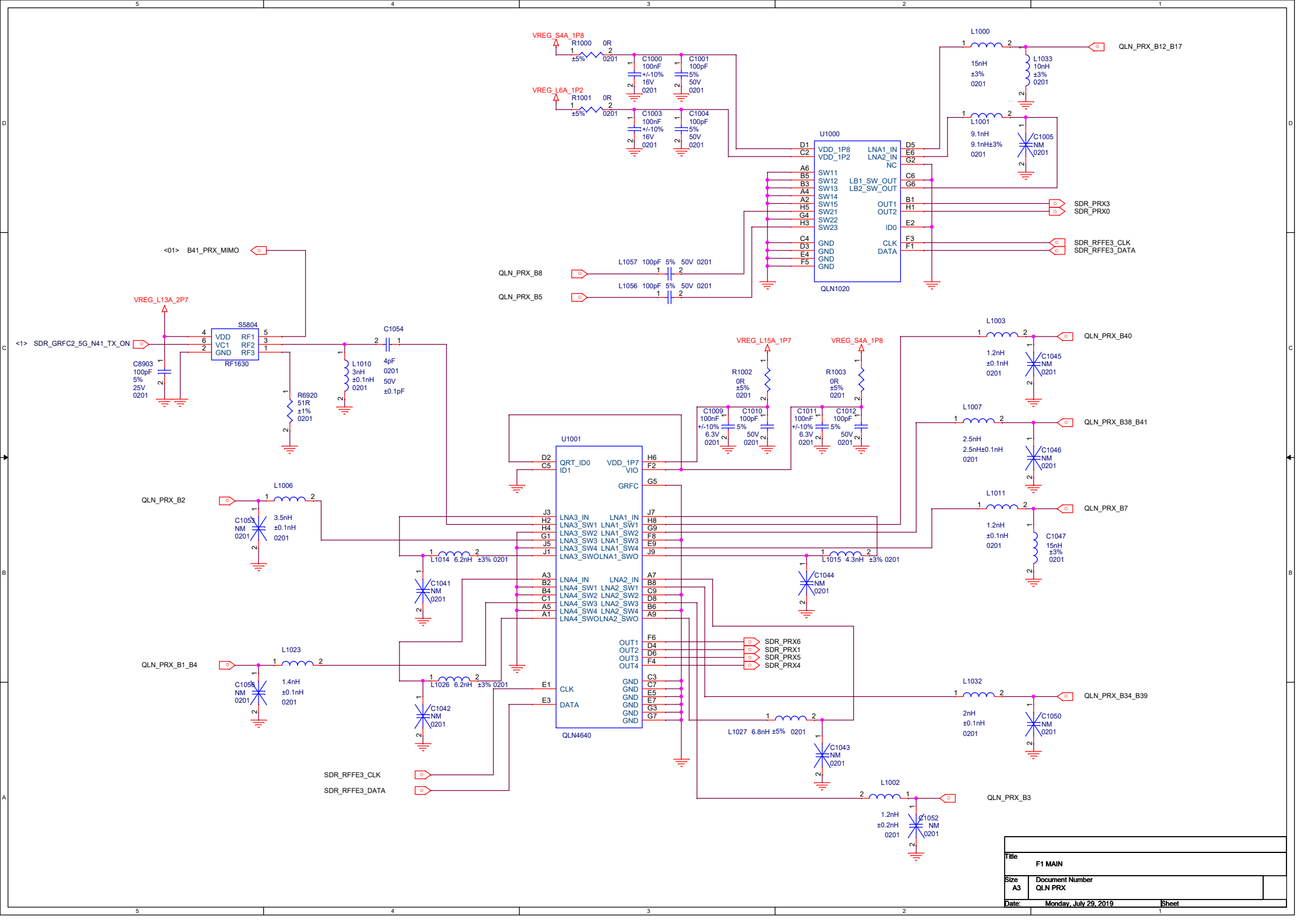

Title	F1 MAIN
Size A3	Document Number QLN PRX
Date: Monday, July 29, 2019	Sheet

Title	F1 MAIN
Size A3	Document Number QLN DRX
Date: Monday, July 29, 2019	Sheet

Title	F1 MAIN
Size A3	Document Number Reserved(for LNA)
Date: Monday, July 29, 2019	Sheet

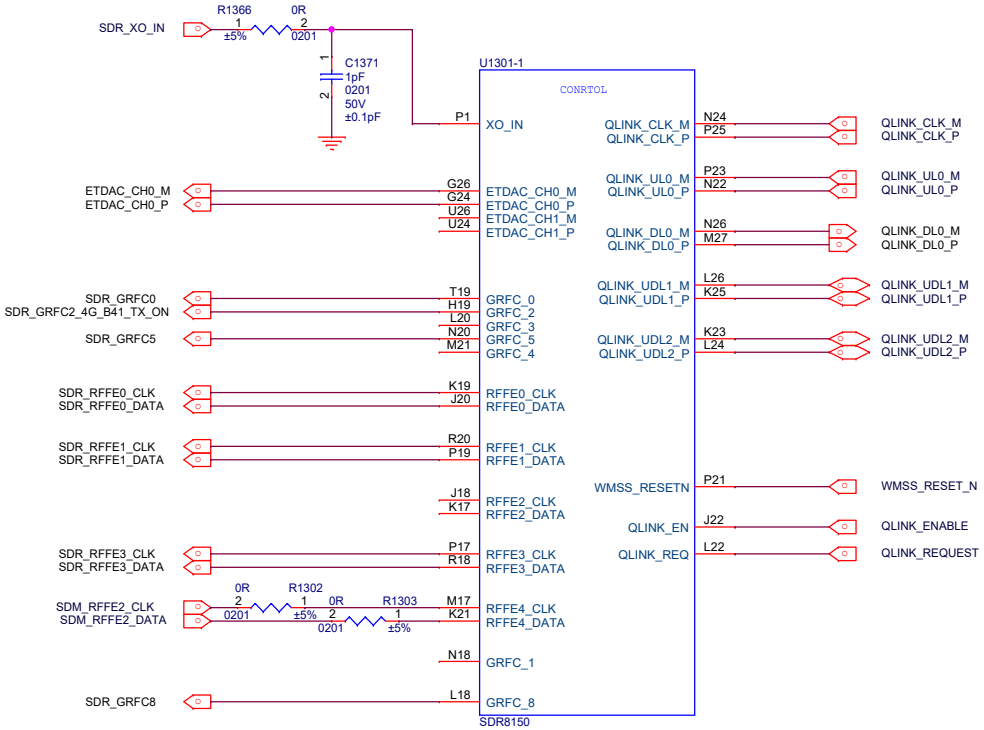

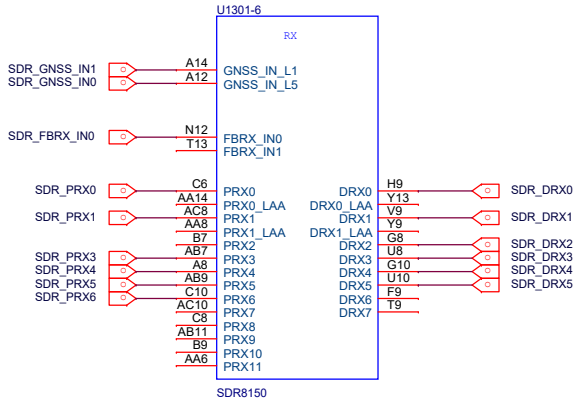

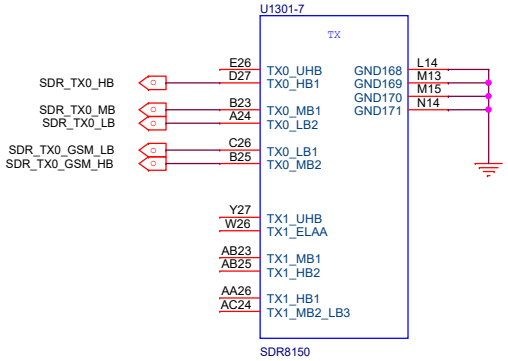

Title	F1 MAIN
Size A3	Document Number WTR Interface
Date: Monday, July 29, 2019	Sheet

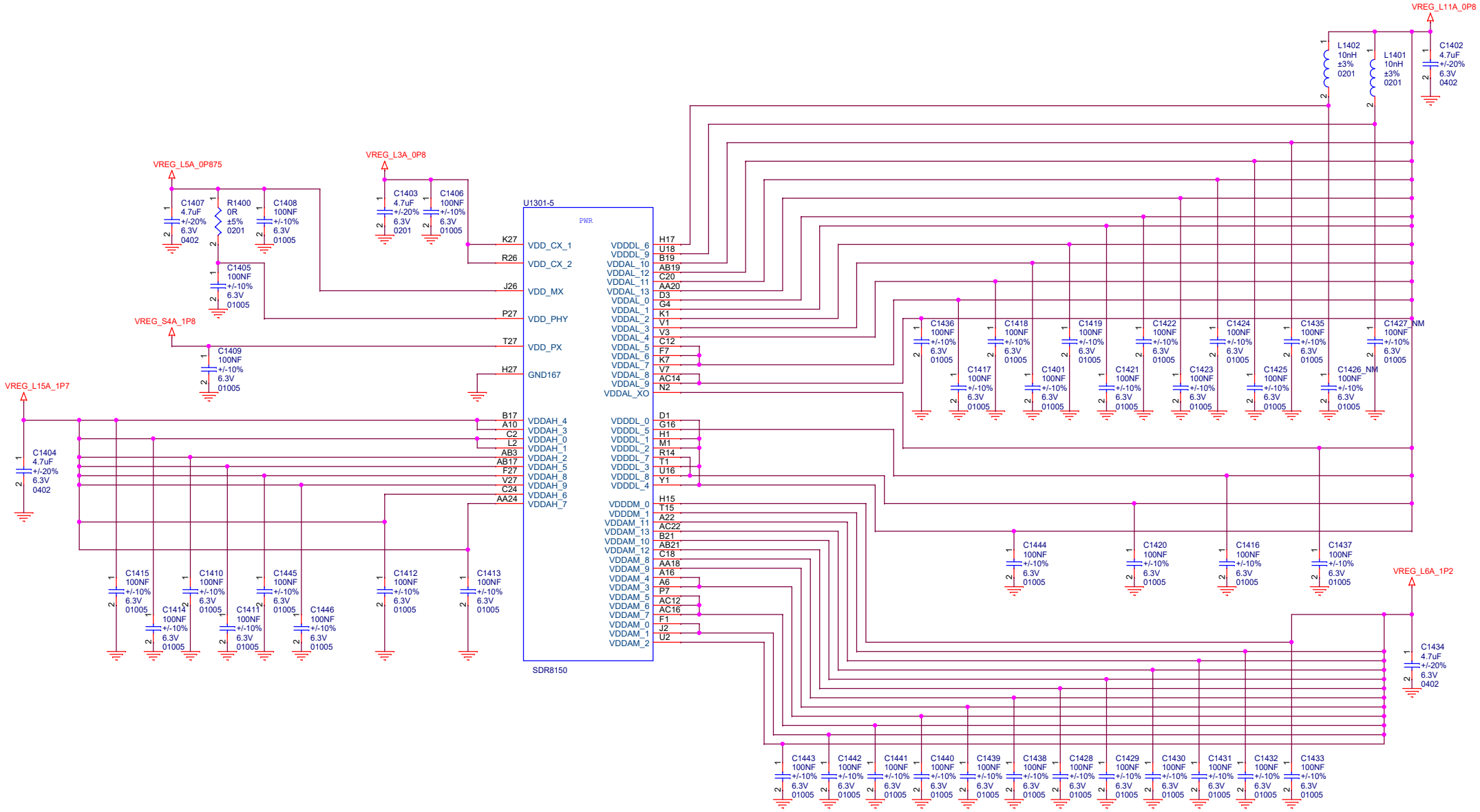

Title	F1 MAIN
Size A3	Document Number WTR PWR
Date: Monday, July 29, 2019	Sheet

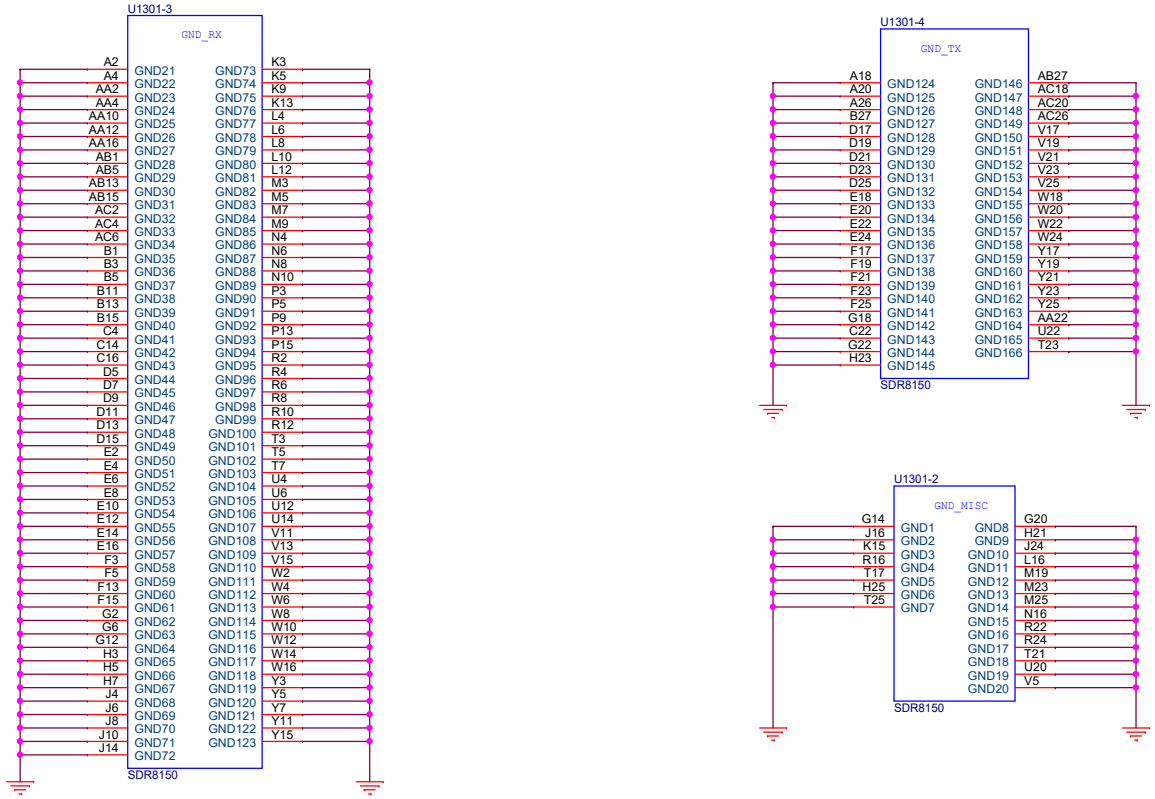

Title	F1 MAIN	
Size A3	Document Number Reserved(for WTR)	
Date: Monday, July 29, 2019	Sheet	

Title	F1 MAIN
Size: A3	Document Number: Reserved(for 5G-sub 6G)
Date: Monday, July 29, 2019	Sheet

Title	F1 MAIN
Size A3	Document Number Reserved(for MM Wave)
Date: Monday, July 29, 2019	Sheet

Title	F1 MAIN
Size A3	Document Number Reserved(for 5G-WTR I)
Date: Monday, July 29, 2019	Sheet

Title	F1 MAIN
Size A3	Document Number Reserved(for 5G-WTR P)
Date: Monday, July 29, 2019	Sheet

Title	F1 MAIN
Size: A3	Document Number: Reserved(for 5G-DC/DC)
Date: Monday, July 29, 2019	Sheet

Title	F1 MAIN
Size A3	Document Number NFC
Date: Monday, July 29, 2019	Sheet

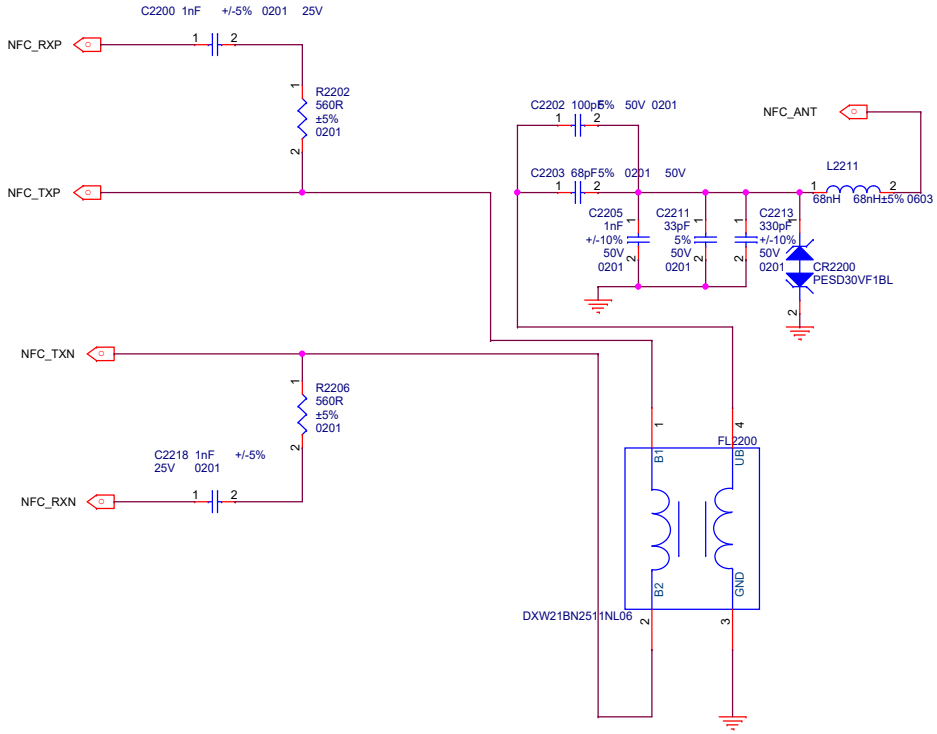

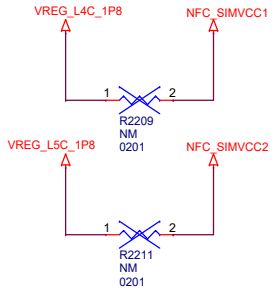

Title	F1 MAIN
Size A3	Document Number Reserved(for PA)
Date: Monday, July 29, 2019	Sheet

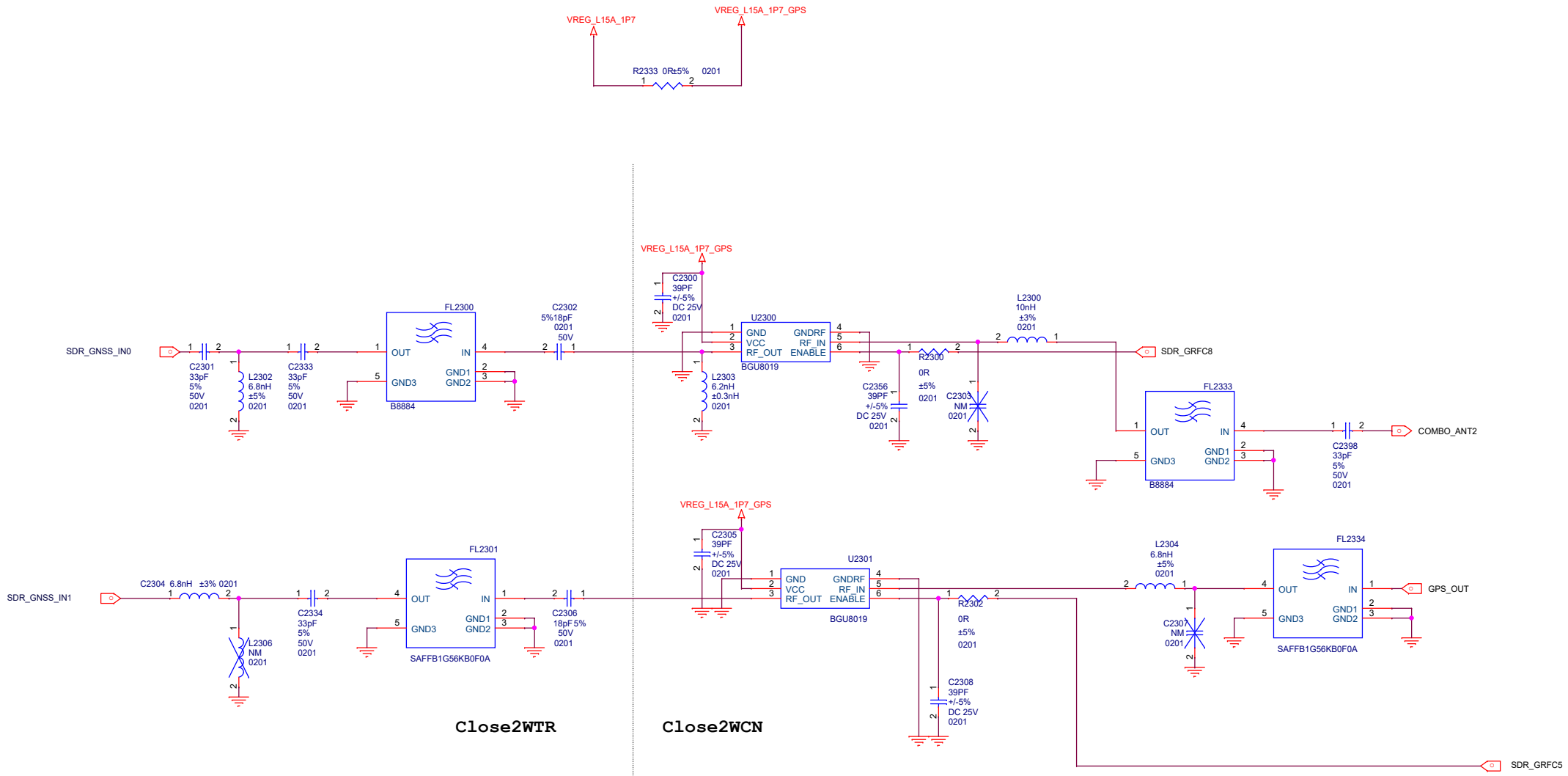

Title	F1 MAIN
Size A3	Document Number GPS
Date: Monday, July 29, 2019	Sheet

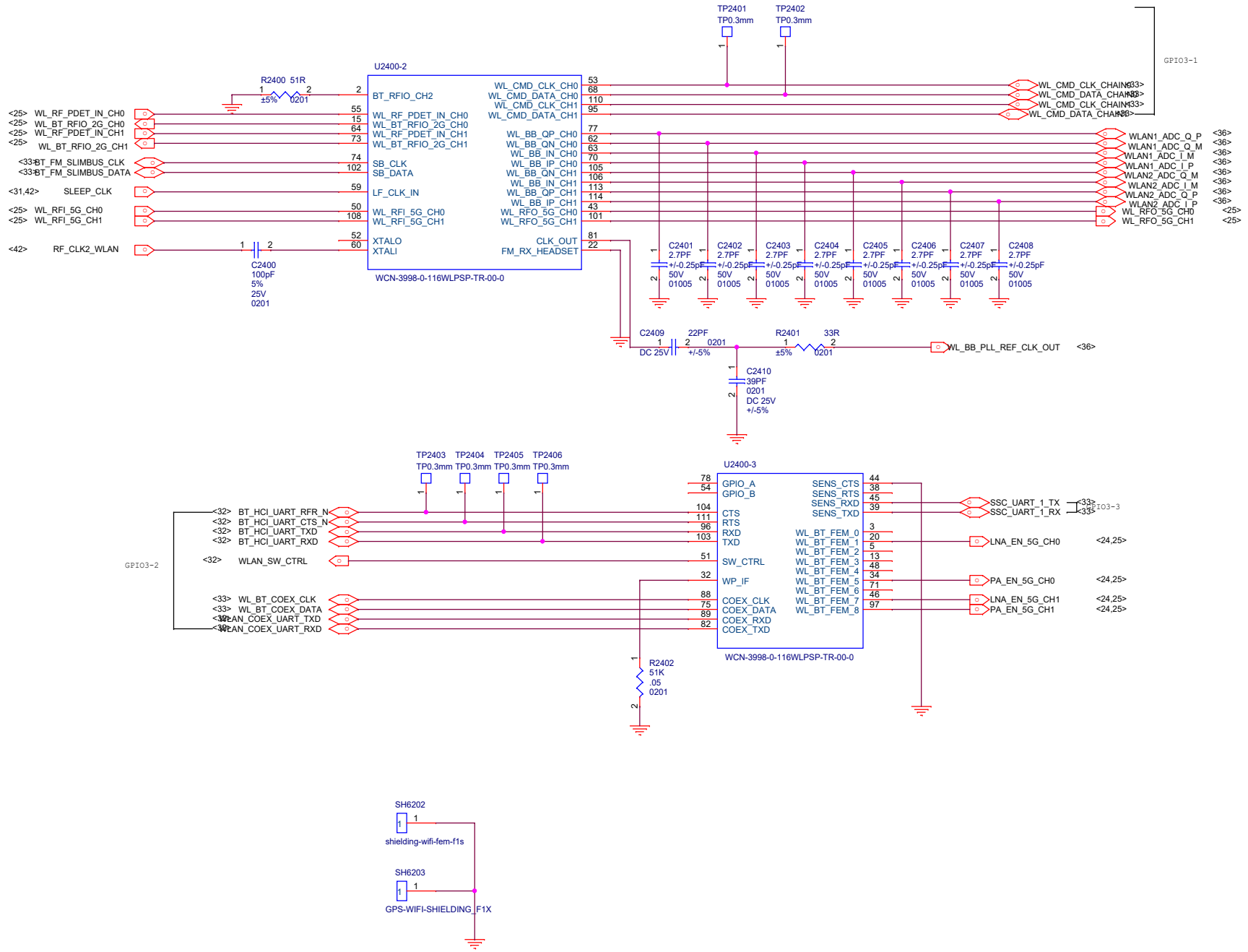

Title	F1 MAIN
Size A3	Document Number WIFI Interface
Date: Monday, July 29, 2019	Sheet

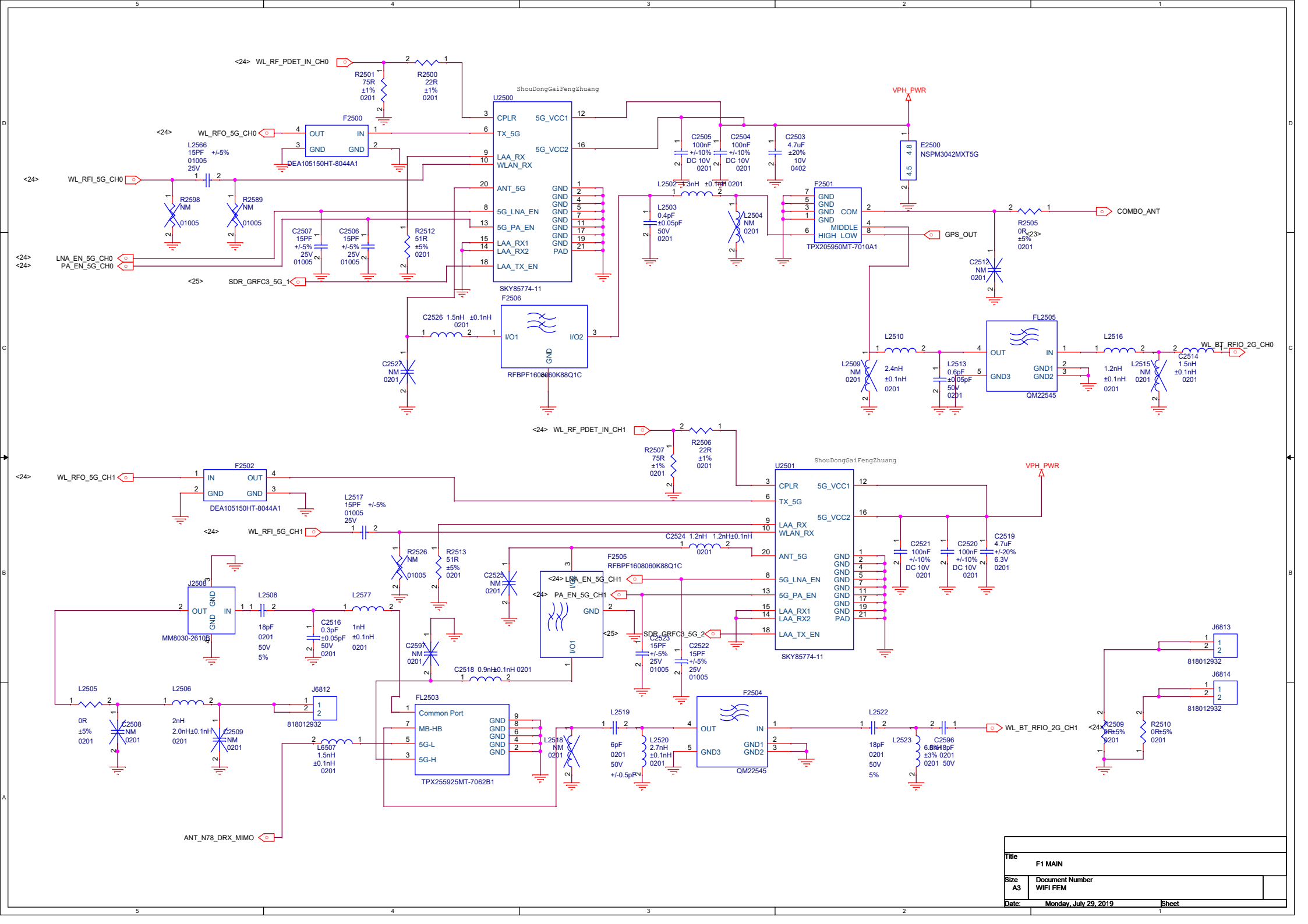

Title	F1 MAIN
Size A3	Document Number WIFI FEM
Date: Monday, July 29, 2019	Sheet

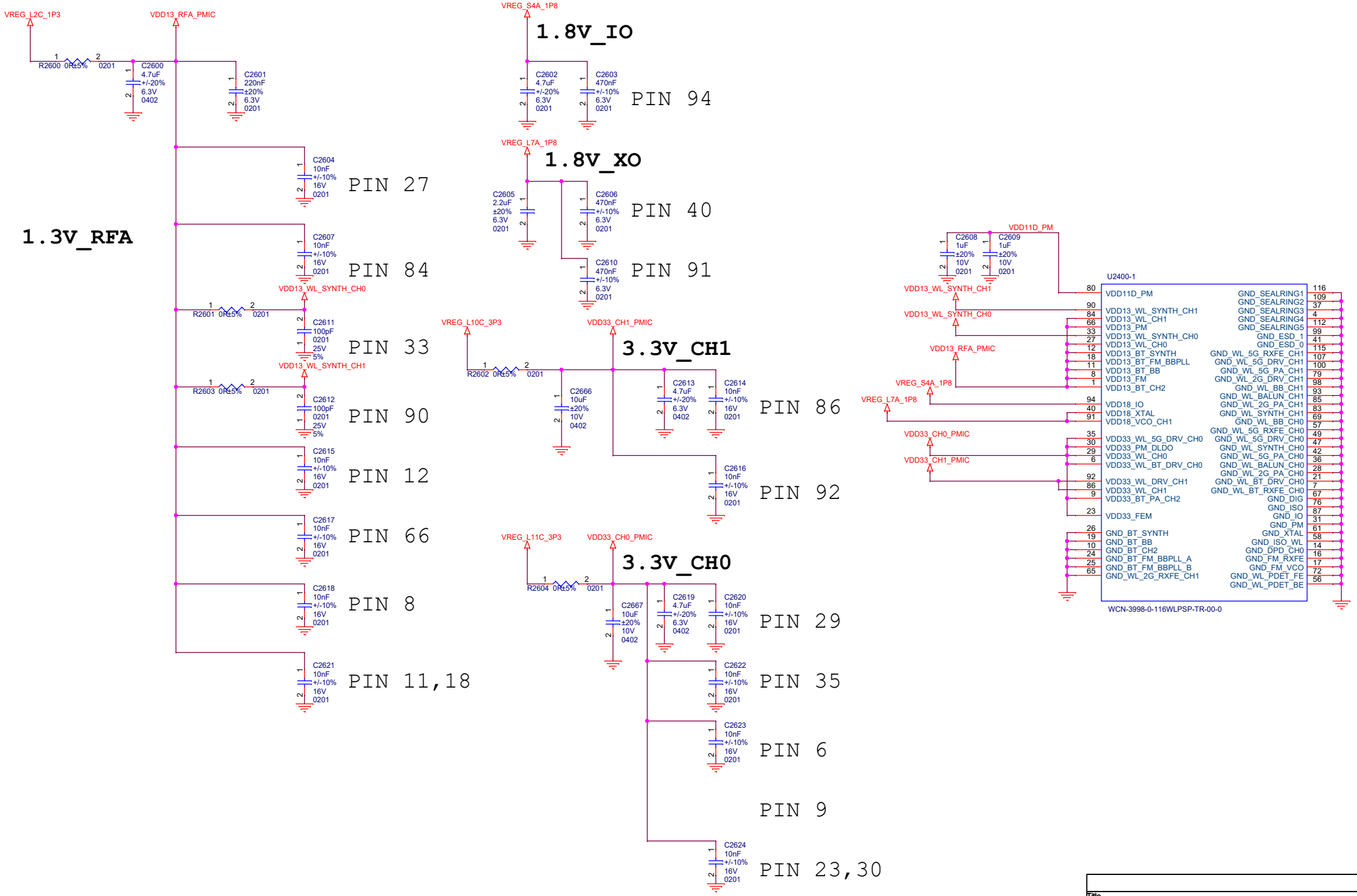

Title	F1 MAIN
Size A3	Document Number WIFI Decouping
Date: Monday, July 29, 2019	Sheet

Title	F1 MAIN
Size: A3	Document Number: Reserved(for 11ad/11ax)
Date: Monday, July 29, 2019	Sheet

Title	F1 MAIN
Size: A3	Document Number: Reserved(for 11ad/11ax)
Date: Monday, July 29, 2019	Sheet

Title	F1 MAIN
Size A3	Document Number Reserved(for Digital FM)
Date: Monday, July 29, 2019	Sheet

Title	F1 MAIN
Size A3	Document Number Reserved(for Analog FM)
Date: Monday, July 29, 2019	Sheet

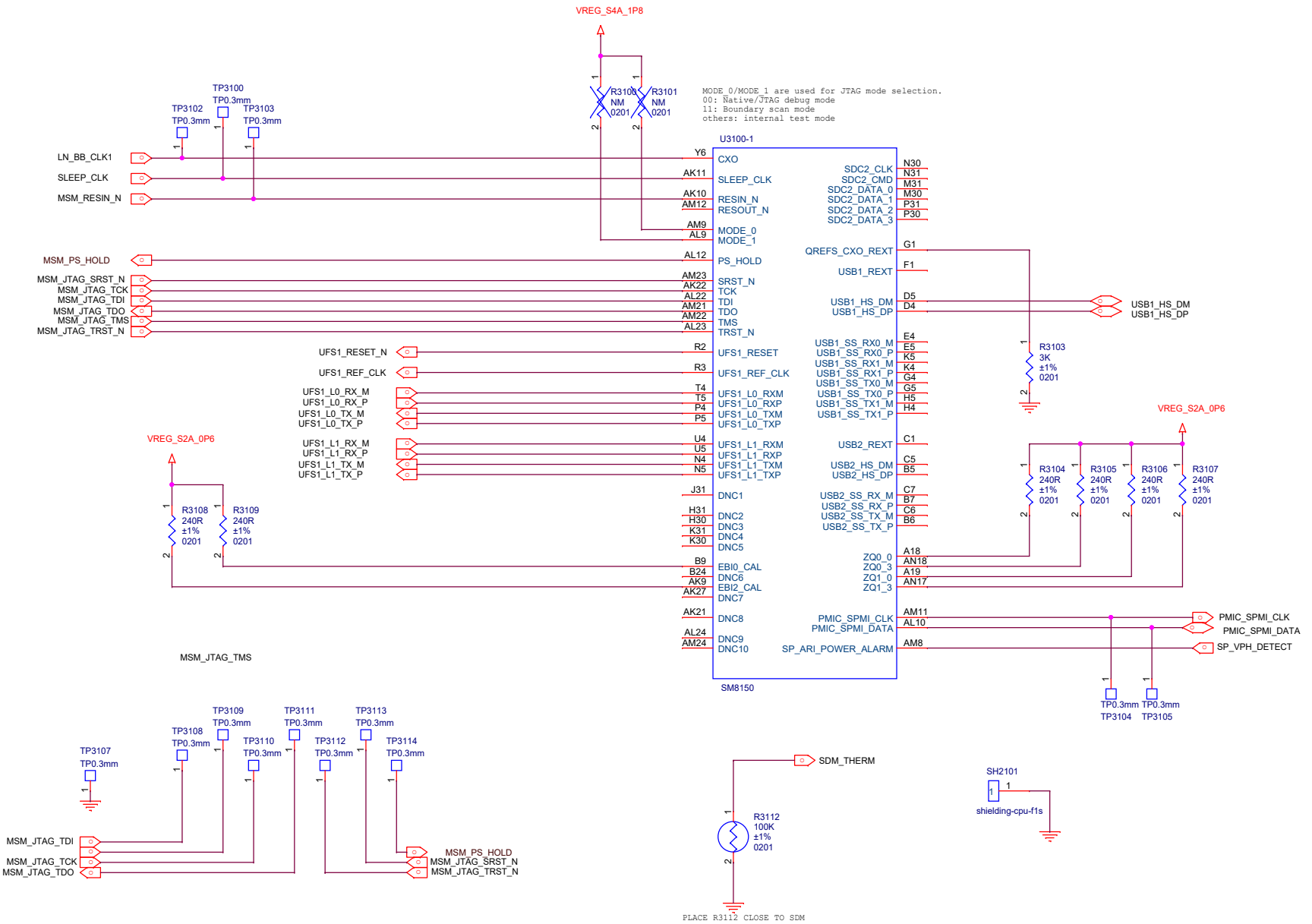

Title	F1 MAIN
Size A3	Document Number SDM855 Control
Date: Monday, July 29, 2019	Sheet

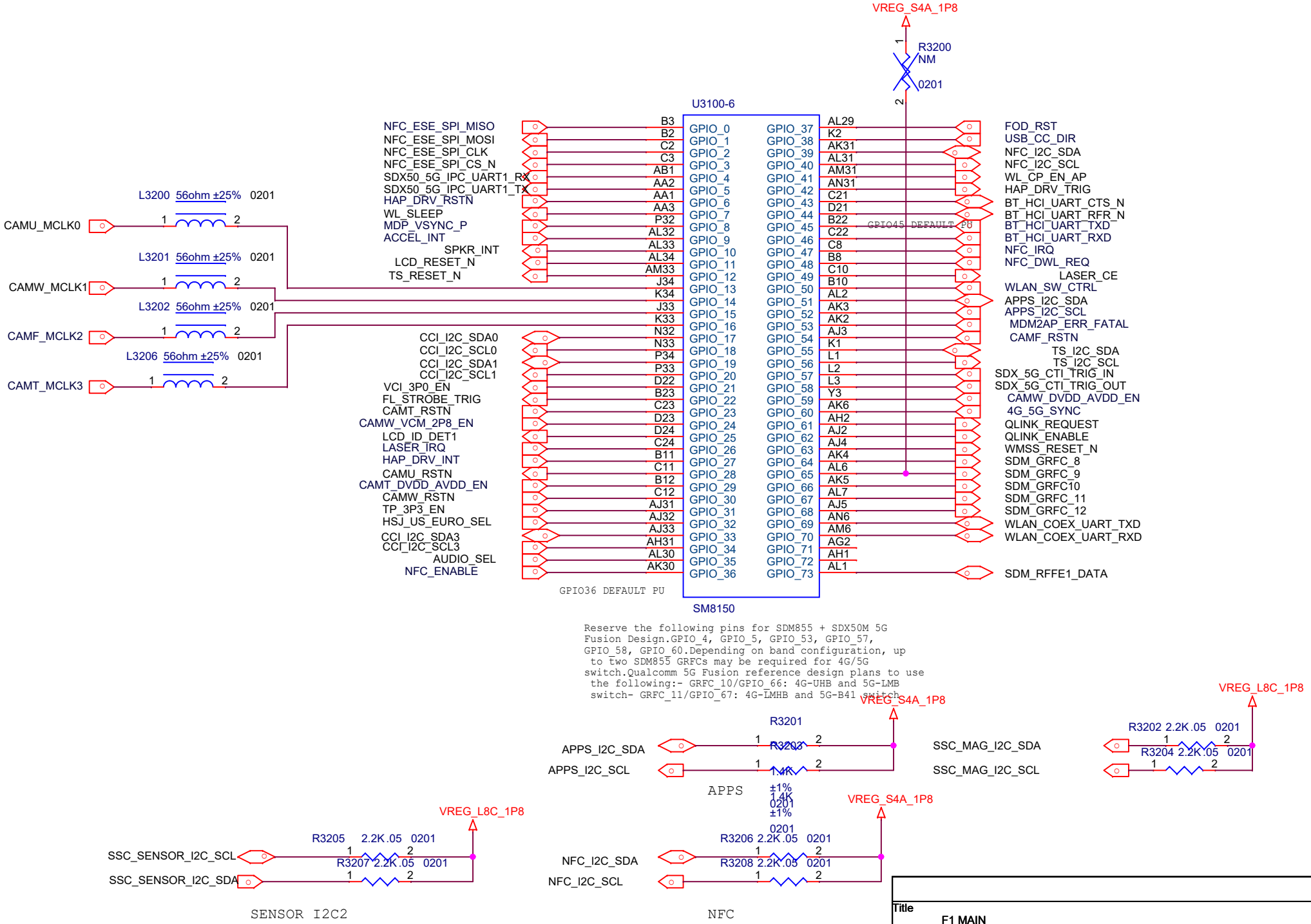

Title	F1 MAIN
Size A4	Document Number SDM855 GPIO-1
Date: Monday, July 29, 2019	Sheet

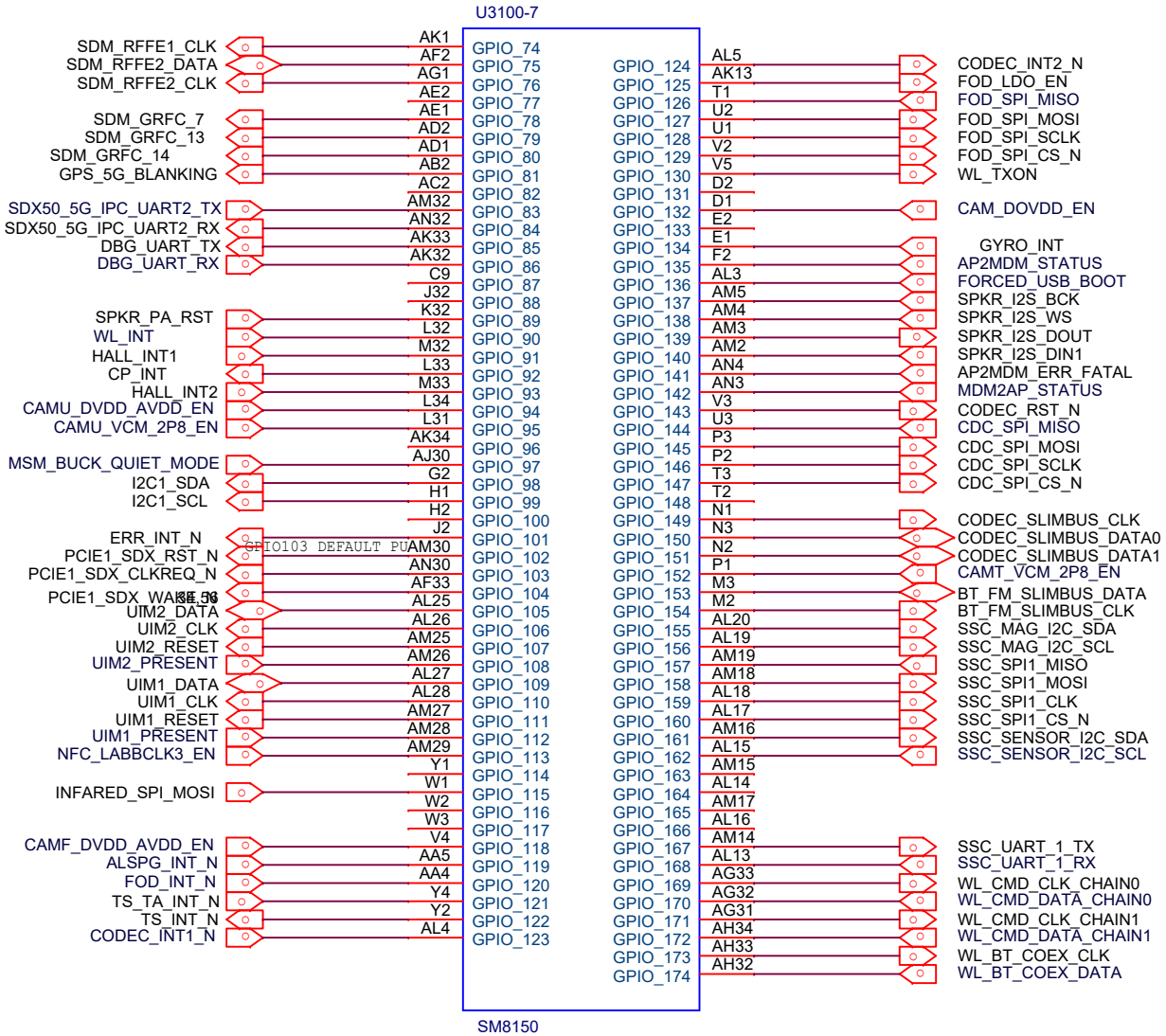

Reserve the following pins for SDM855 + SDX50M 5G Fusion Design.GPIO_81, GPIO_83, GPIO_84, GPIO_97, GPIO_102, GPIO_103, GPIO_104, GPIO_135, GPIO_141, GPIO_142

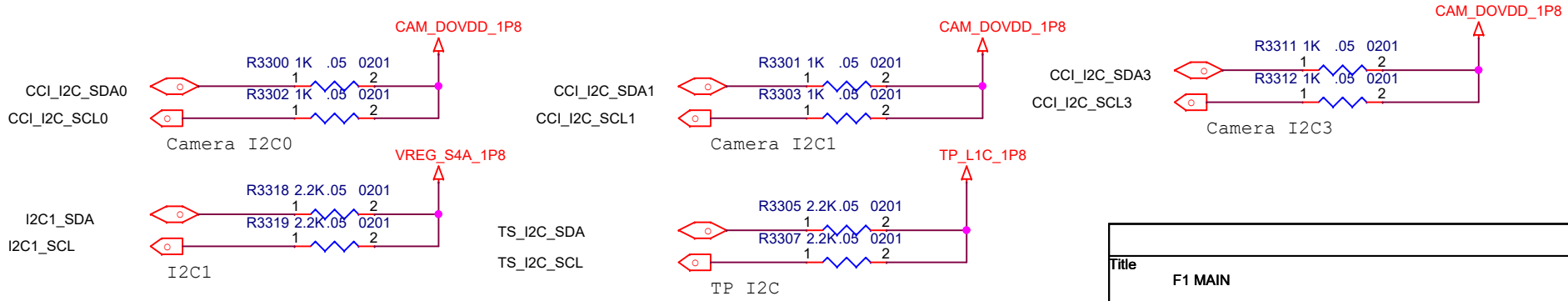

Title	F1 MAIN
Size A4	Document Number SDM855 GPIO-2
Date: Monday, July 29, 2019	Sheet

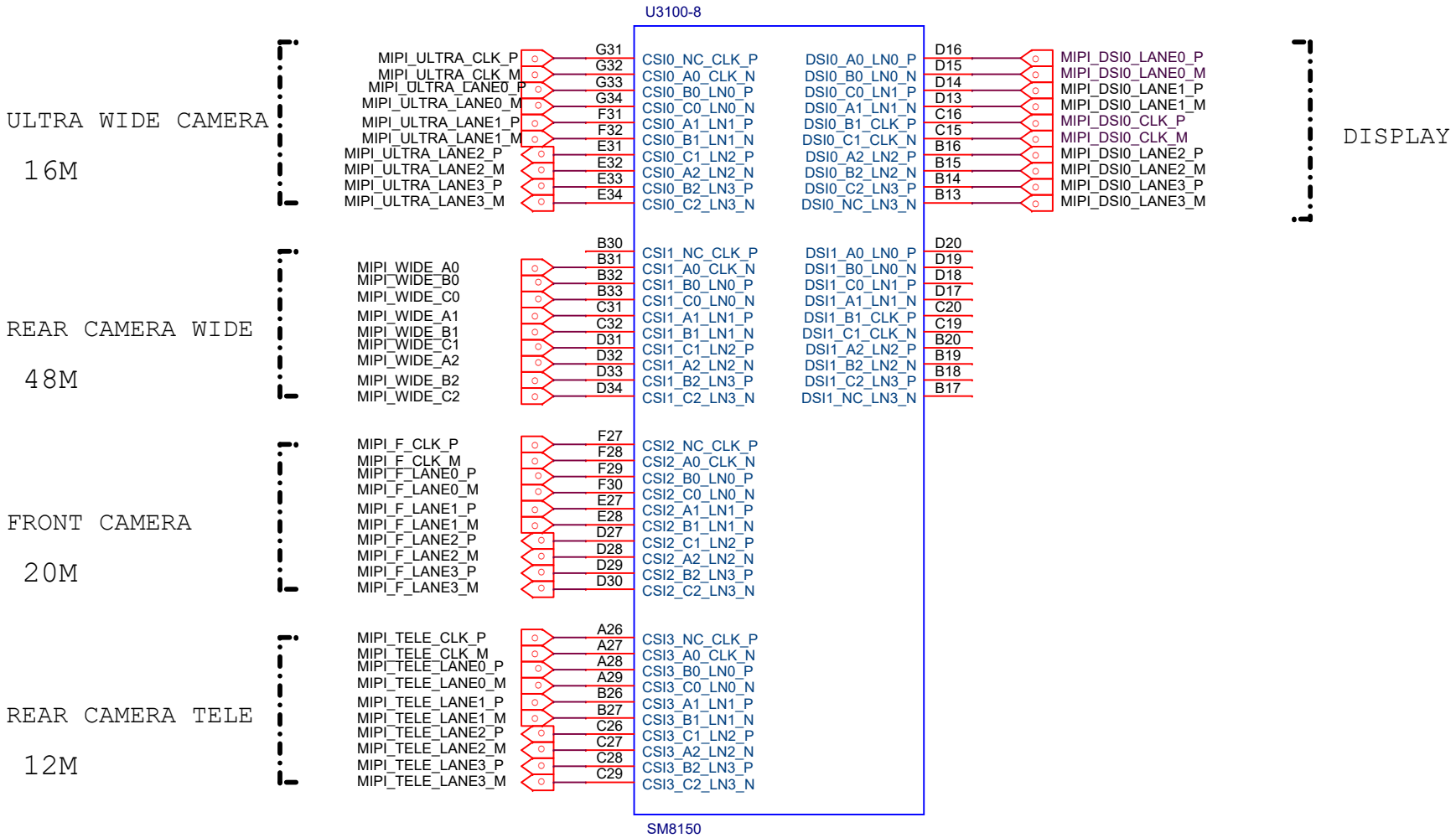

Title	F1 MAIN
Size A4	Document Number SDM855 MIPI
Date: Monday, July 29, 2019	Sheet

Title	F1 MAIN
Size A3	Document Number Reserved(for MIPI)
Date: Monday, July 29, 2019	Sheet

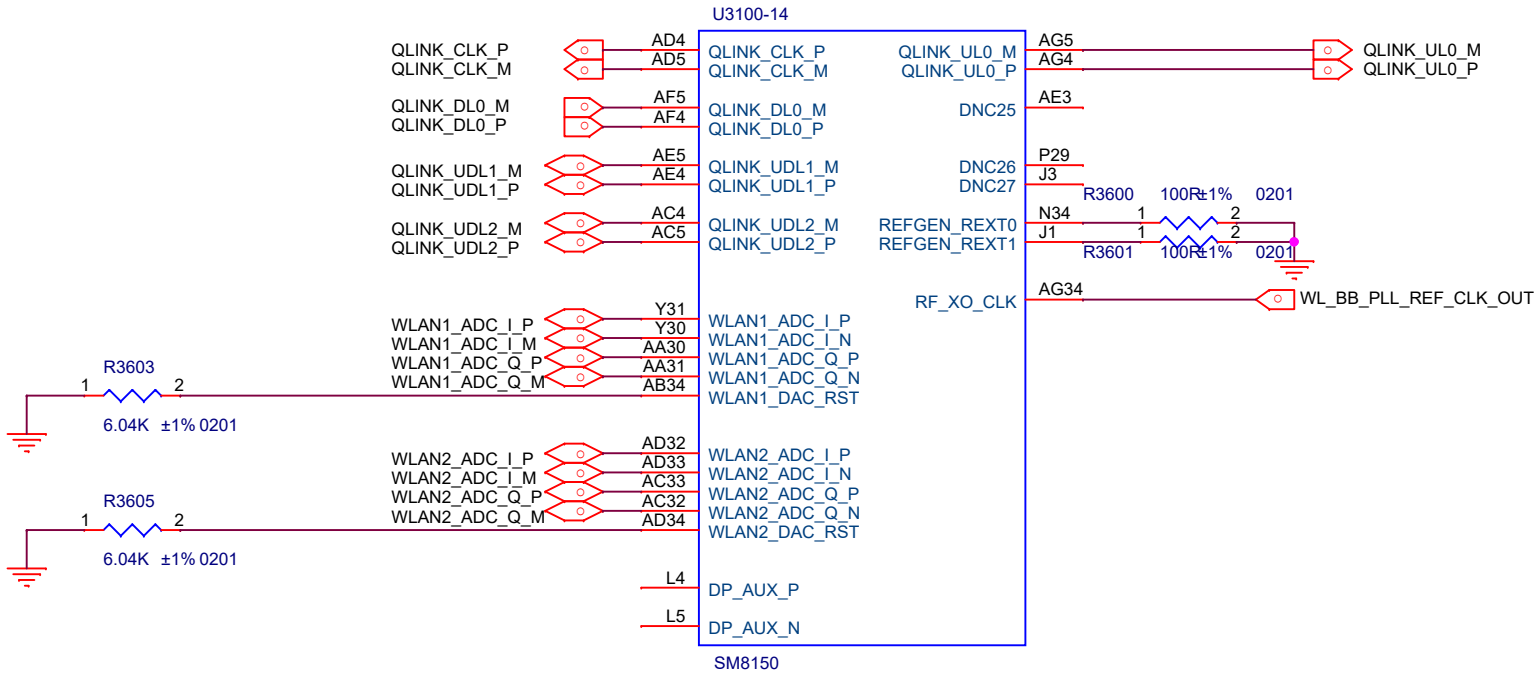

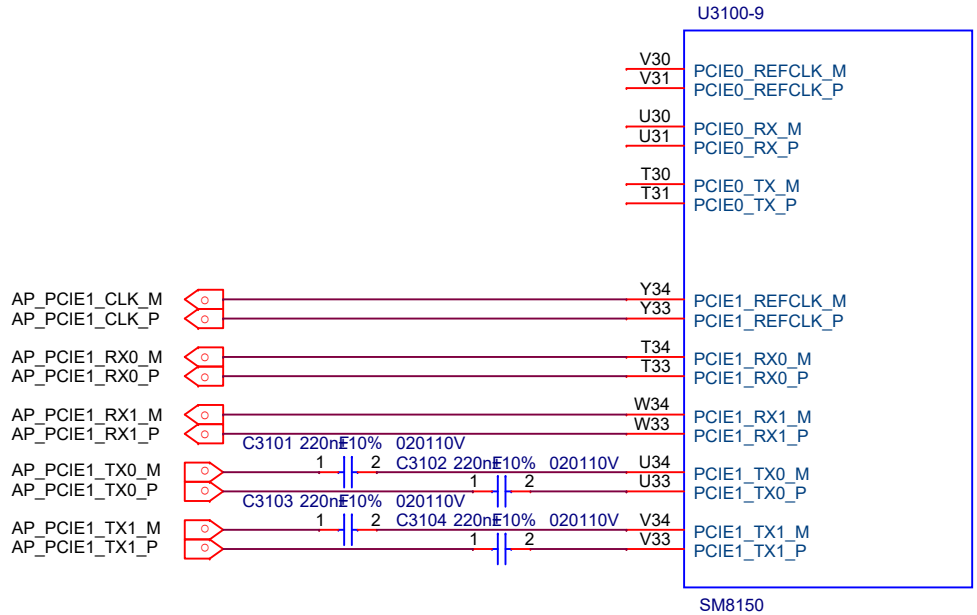

Title	F1 MAIN
Size A4	Document Number SDM855 RF INTF
Date: Monday, July 29, 2019	Sheet

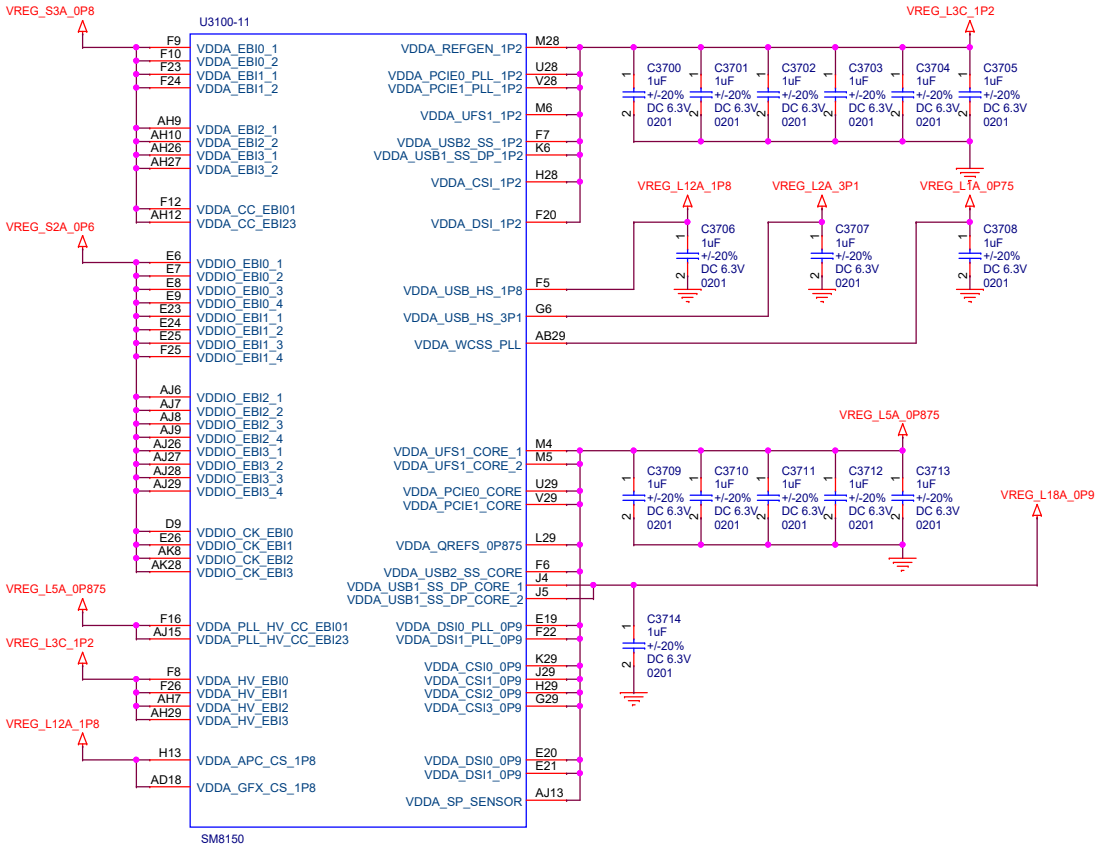

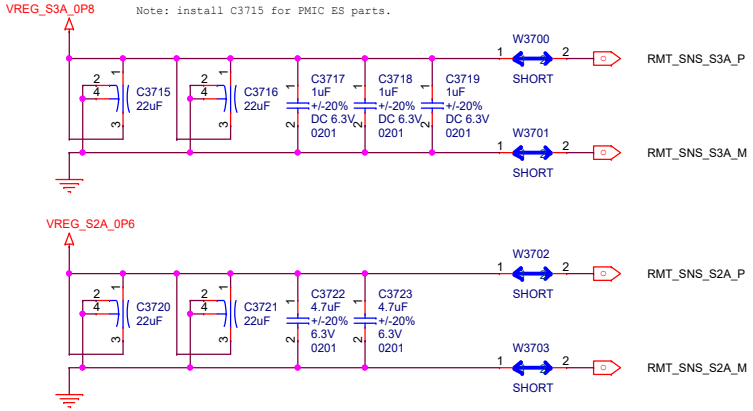

Title	F1 MAIN
Size A3	Document Number SDM855 PWR1
Date: Monday, July 29, 2019	Sheet

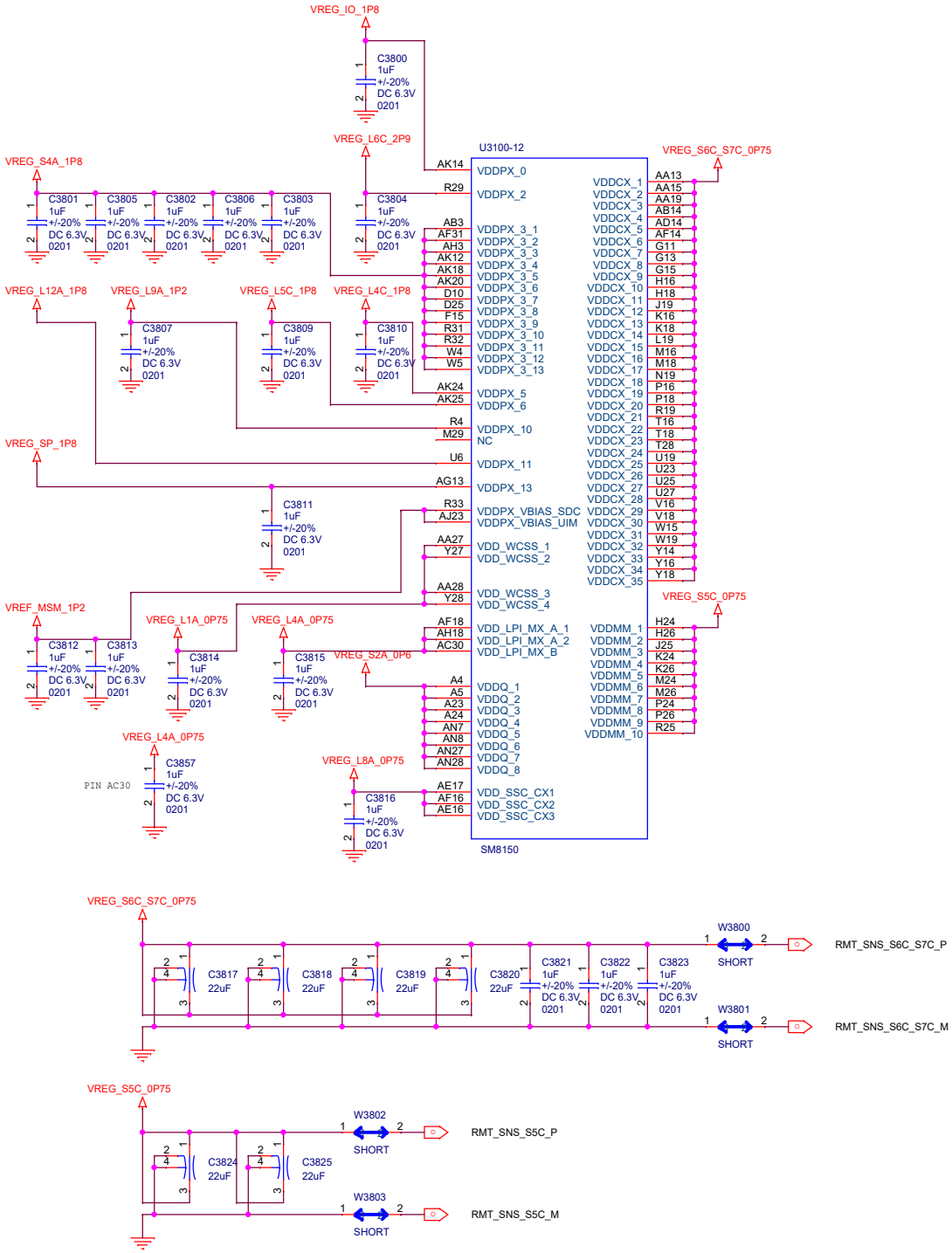

Title	F1 MAIN
Size A3	Document Number SDM855 PWR2
Date: Monday, July 29, 2019	Sheet

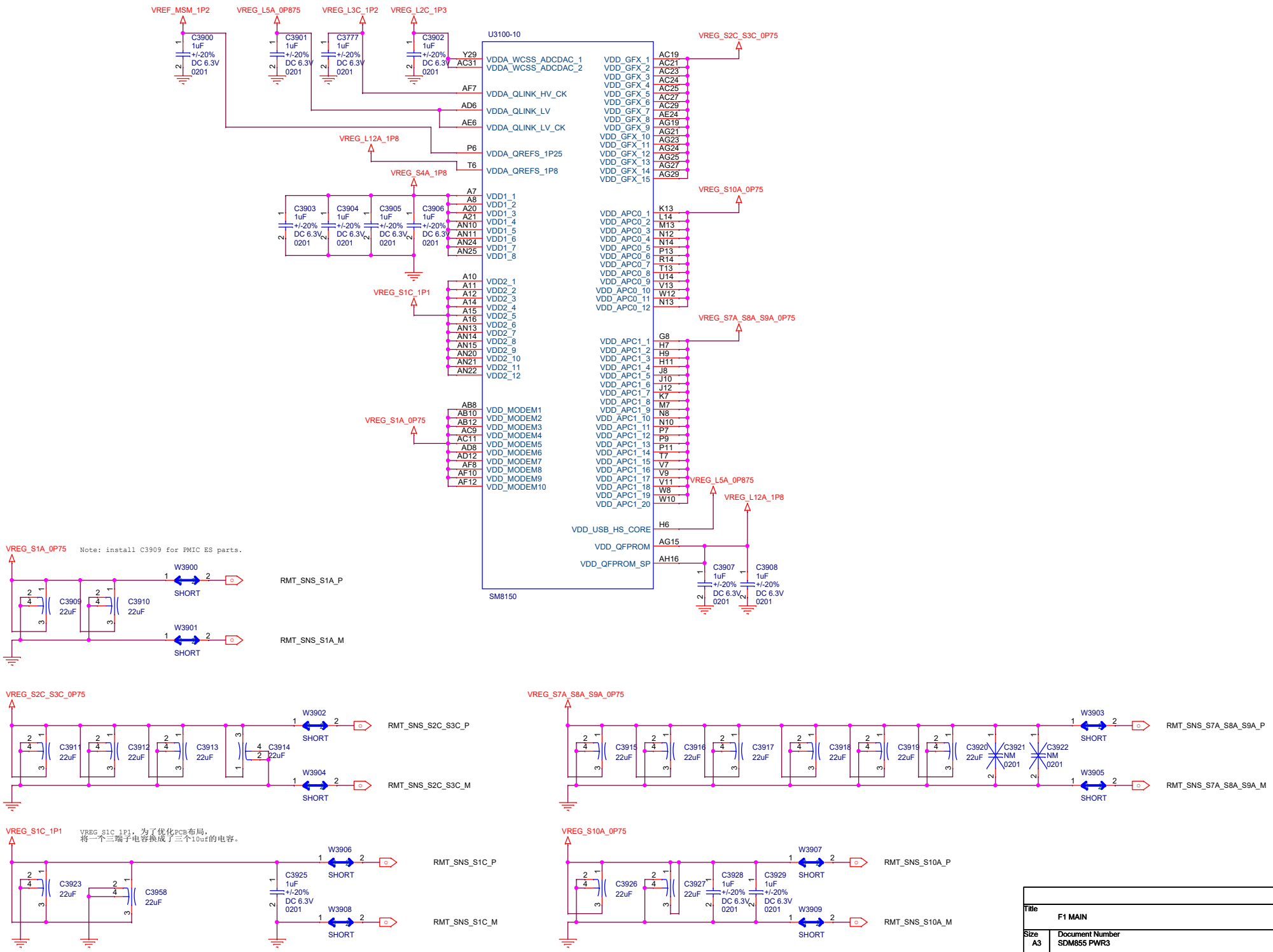
VREF_MSM_1P2
VREG_L5A_0P875
VREG_L3C_1P2
VREG_L2C_1P3
C3900 1uF +/-20% DC 6.3V 0201
C3901 1uF +/-20% DC 6.3V 0201
C3777 1uF +/-20% DC 6.3V 0201
C3902 1uF +/-20% DC 6.3V 0201
U3100-10
VDDA_WCSS_ADCDAC_1
VDDA_WCSS_ADCDAC_2
VDDA_QLINK_HV_CK
VDDA_QLINK_LV
VDDA_QLINK_LV_CK
VDDA_QREFS_1P25
VDDA_QREFS_1P8
VREG_L12A_1P8
VREG_S4A_1P8
C3903 1uF +/-20% DC 6.3V 0201
C3904 1uF +/-20% DC 6.3V 0201
C3905 1uF +/-20% DC 6.3V 0201
C3906 1uF +/-20% DC 6.3V 0201
VDD1_1
VDD1_2
VDD1_3
VDD1_4
VDD1_5
VDD1_6
VDD1_7
VDD1_8
VREG_S1C_1P1
VDD2_1
VDD2_2
VDD2_3
VDD2_4
VDD2_5
VDD2_6
VDD2_7
VDD2_8
VDD2_9
VDD2_10
VDD2_11
VDD2_12
VREG_S1A_0P75
VDD_MODEM1
VDD_MODEM2
VDD_MODEM3
VDD_MODEM4
VDD_MODEM5
VDD_MODEM6
VDD_MODEM7
VDD_MODEM8
VDD_MODEM9
VDD_MODEM10
VREG_S2C_S3C_0P75
VDD_GFX_1
VDD_GFX_2
VDD_GFX_3
VDD_GFX_4
VDD_GFX_5
VDD_GFX_6
VDD_GFX_7
VDD_GFX_8
VDD_GFX_9
VDD_GFX_10
VDD_GFX_11
VDD_GFX_12
VDD_GFX_13
VDD_GFX_14
VDD_GFX_15
VREG_S10A_0P75
VDD_APC0_1
VDD_APC0_2
VDD_APC0_3
VDD_APC0_4
VDD_APC0_5
VDD_APC0_6
VDD_APC0_7
VDD_APC0_8
VDD_APC0_9
VDD_APC0_10
VDD_APC0_11
VDD_APC0_12
VREG_S7A_S8A_S9A_0P75
VDD_APC1_1
VDD_APC1_2
VDD_APC1_3
VDD_APC1_4
VDD_APC1_5
VDD_APC1_6
VDD_APC1_7
VDD_APC1_8
VDD_APC1_9
VDD_APC1_10
VDD_APC1_11
VDD_APC1_12
VDD_APC1_13
VDD_APC1_14
VDD_APC1_15
VDD_APC1_16
VDD_APC1_17
VDD_APC1_18
VDD_APC1_19
VDD_APC1_20
VREG_L5A_0P875
VREG_L12A_1P8
VDD_USB_HS_CORE
VDD_QFPROM
VDD_QFPROM_SP
C3907 1uF +/-20% DC 6.3V 0201
C3908 1uF +/-20% DC 6.3V 0201
SM8150
VREG_S1A_0P75
Note: install C3909 for PMIC ES parts.
W3900 SHORT
RMT_SNS_S1A_P
C3909 22uF
C3910 22uF
W3901 SHORT
RMT_SNS_S1A_M
VREG_S2C_S3C_0P75
W3902 SHORT
RMT_SNS_S2C_S3C_P
C3911 22uF
C3912 22uF
C3913 22uF
C3914 22uF
W3904 SHORT
RMT_SNS_S2C_S3C_M
VREG_S7A_S8A_S9A_0P75
W3903 SHORT
RMT_SNS_S7A_S8A_S9A_P
C3915 22uF
C3916 22uF
C3917 22uF
C3918 22uF
C3919 22uF
C3920 22uF
C3921 NM 0201
C3922 NM 0201
W3905 SHORT
RMT_SNS_S7A_S8A_S9A_M
VREG_S1C_1P1
VREG_S1C_1P1，为了优化PCB布局，
将一个三端子电容换成了三个10uf的电容。
W3906 SHORT
RMT_SNS_S1C_P
C3923 22uF
C3958 22uF
C3925 1uF +/-20% DC 6.3V 0201
W3908 SHORT
RMT_SNS_S1C_M
VREG_S10A_0P75
W3907 SHORT
RMT_SNS_S10A_P
C3926 22uF
C3927 22uF
C3928 1uF +/-20% DC 6.3V 0201
C3929 1uF +/-20% DC 6.3V 0201
W3909 SHORT
RMT_SNS_S10A_M
Title
F1 MAIN
Size
A3
Document Number
SDM855 PWR3
Date:
Monday, July 29, 2019
Sheet

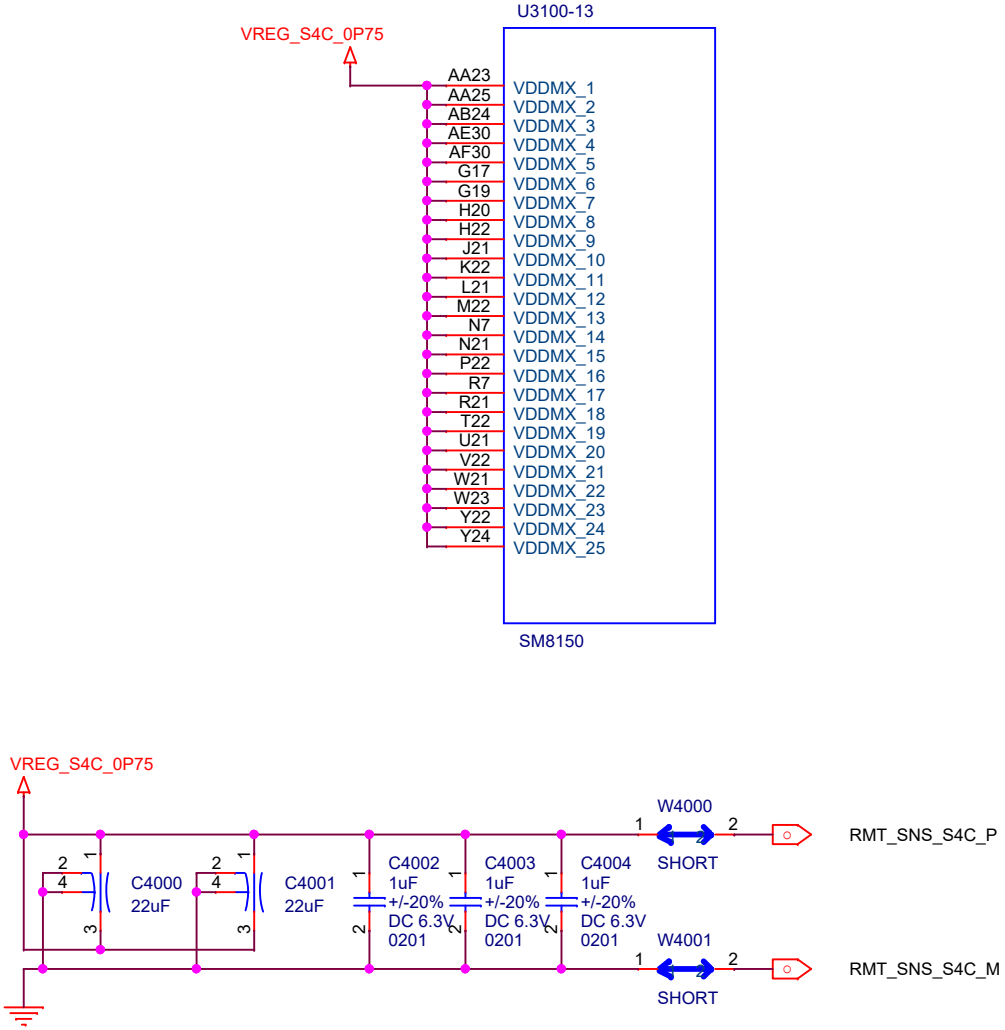

Title	F1 MAIN
Size A4	Document Number SDM855 PWR4
Date: Monday, July 29, 2019	Sheet

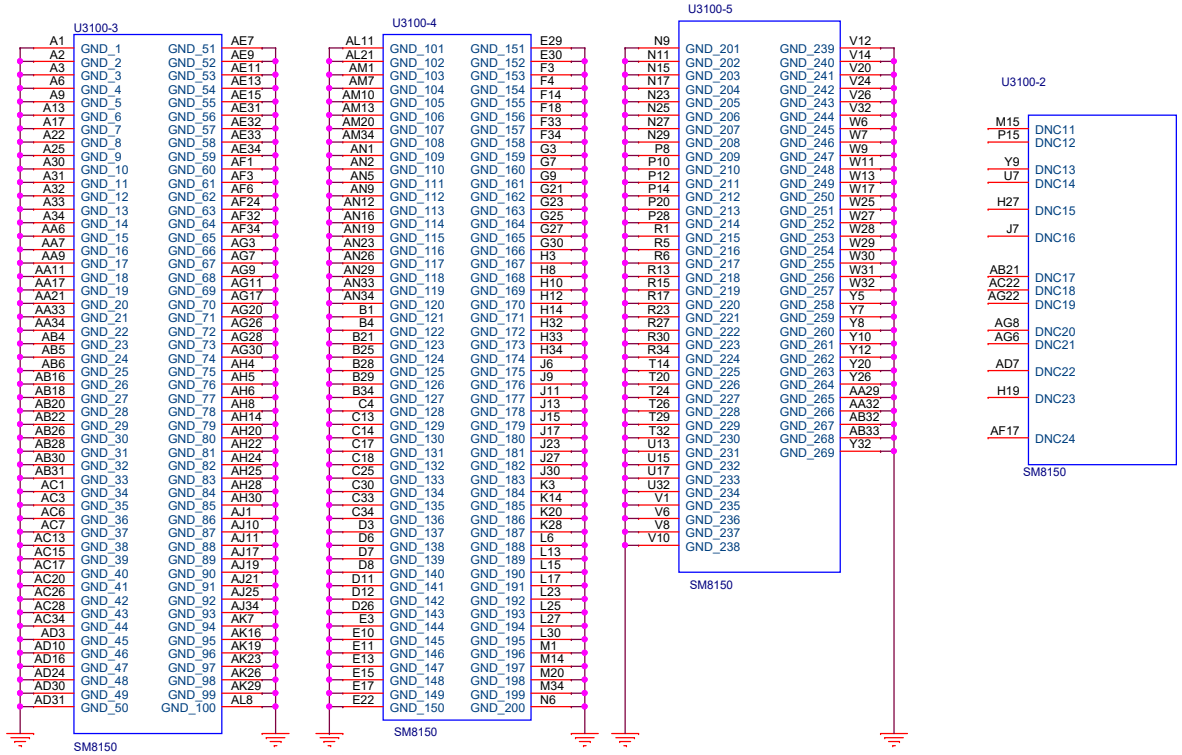

Title	F1 MAIN
Size A3	Document Number SDM855 GND
Date: Monday, July 29, 2019	Sheet

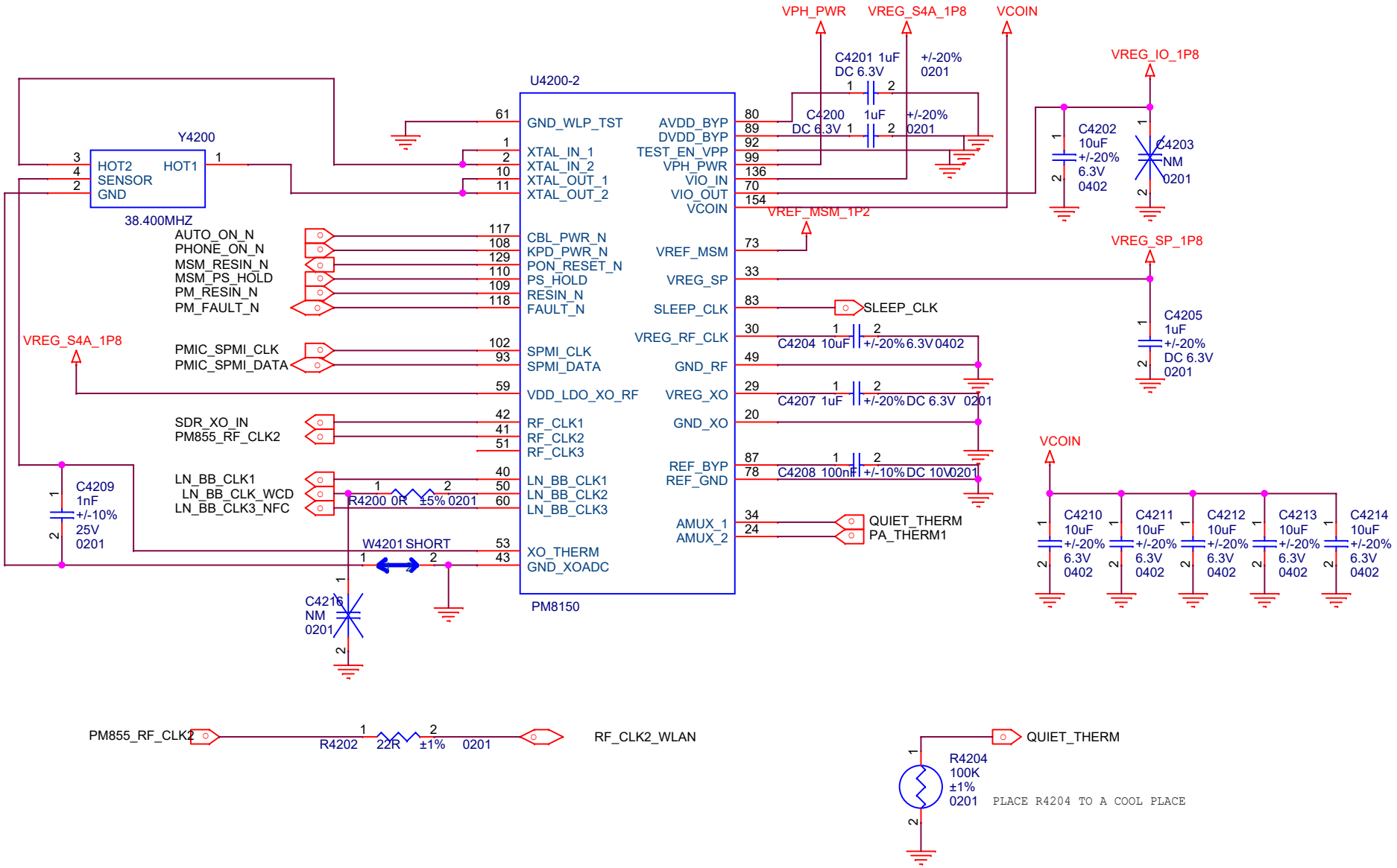

Title	F1 MAIN
Size A4	Document Number PM855 XO&CTRL
Date: Monday, July 29, 2019	Sheet

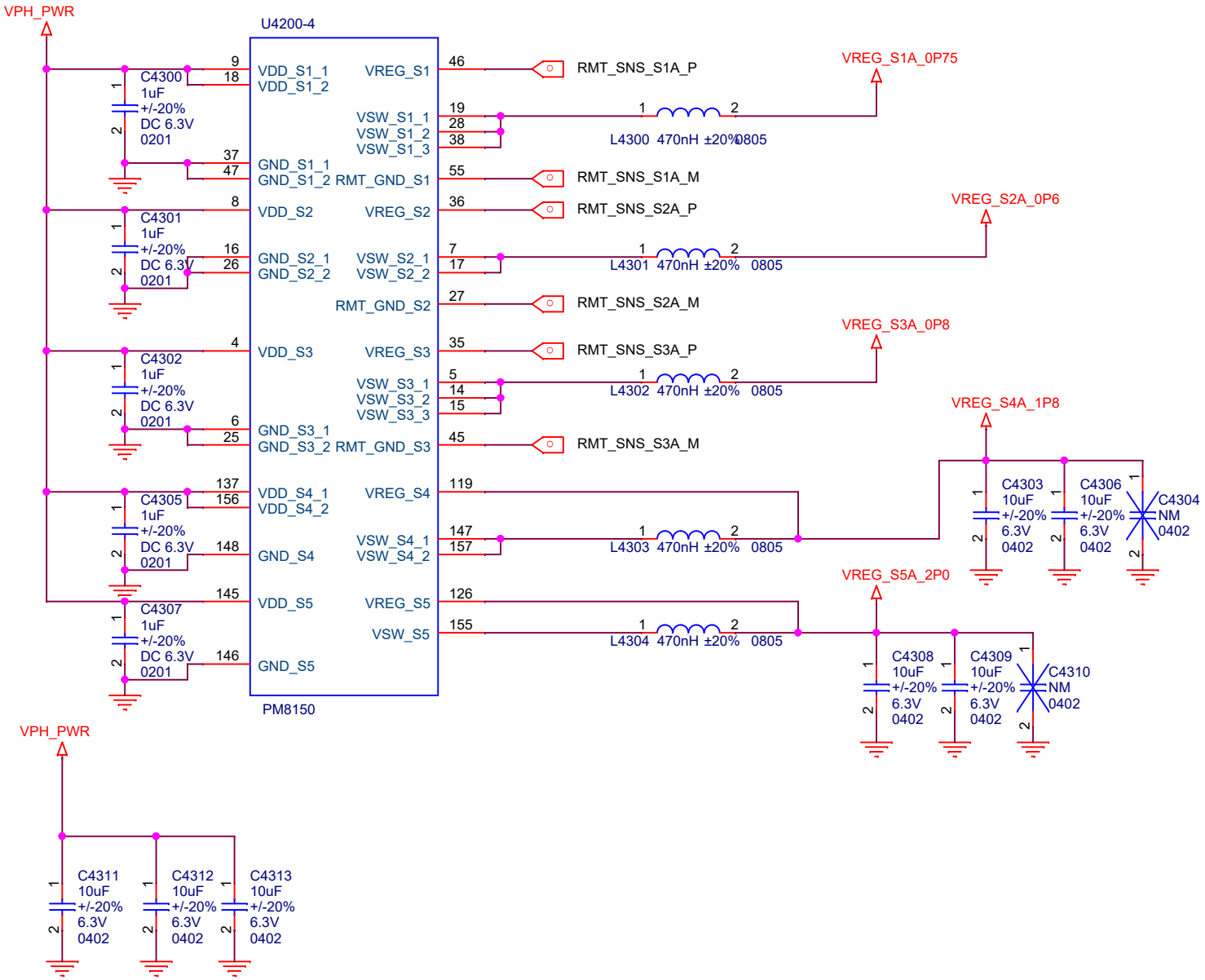

Title	F1 MAIN
Size A4	Document Number PM855 BUCK CONVERTER1
Date: Monday, July 29, 2019	Sheet 44

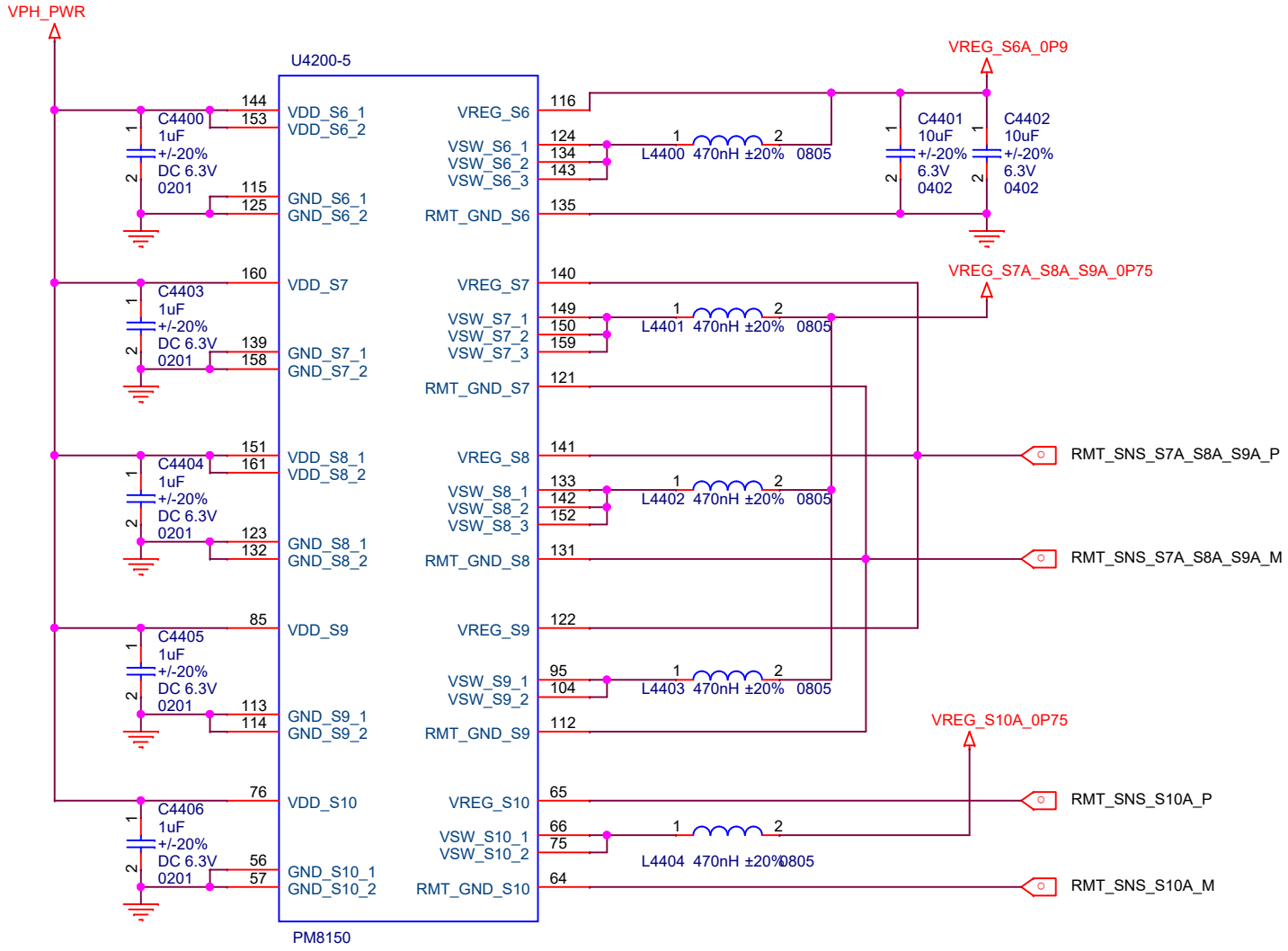

Title	F1 MAIN
Size A4	Document Number PM855 BUCK CONVERTER2
Date: Monday, July 29, 2019	Sheet

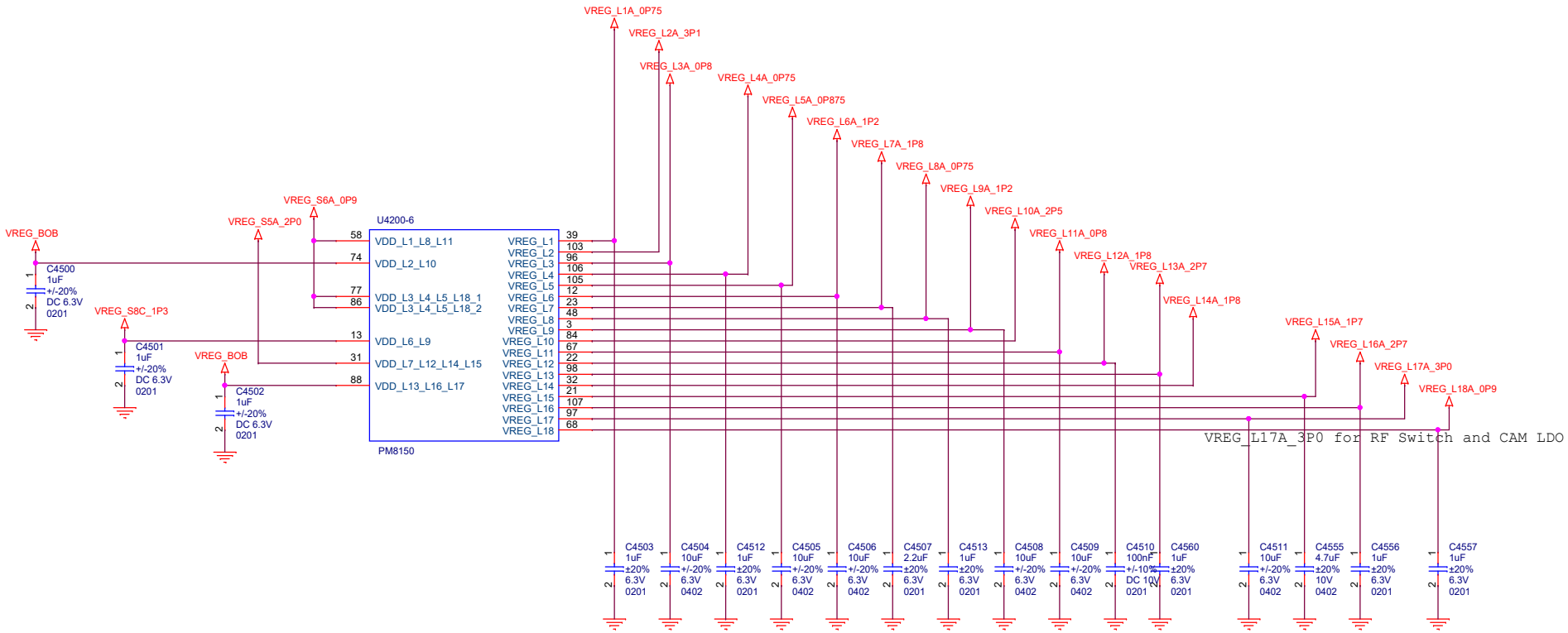

Title	F1 MAIN
Size A3	Document Number PM855 LDOs
Date: Monday, July 29, 2019	Sheet

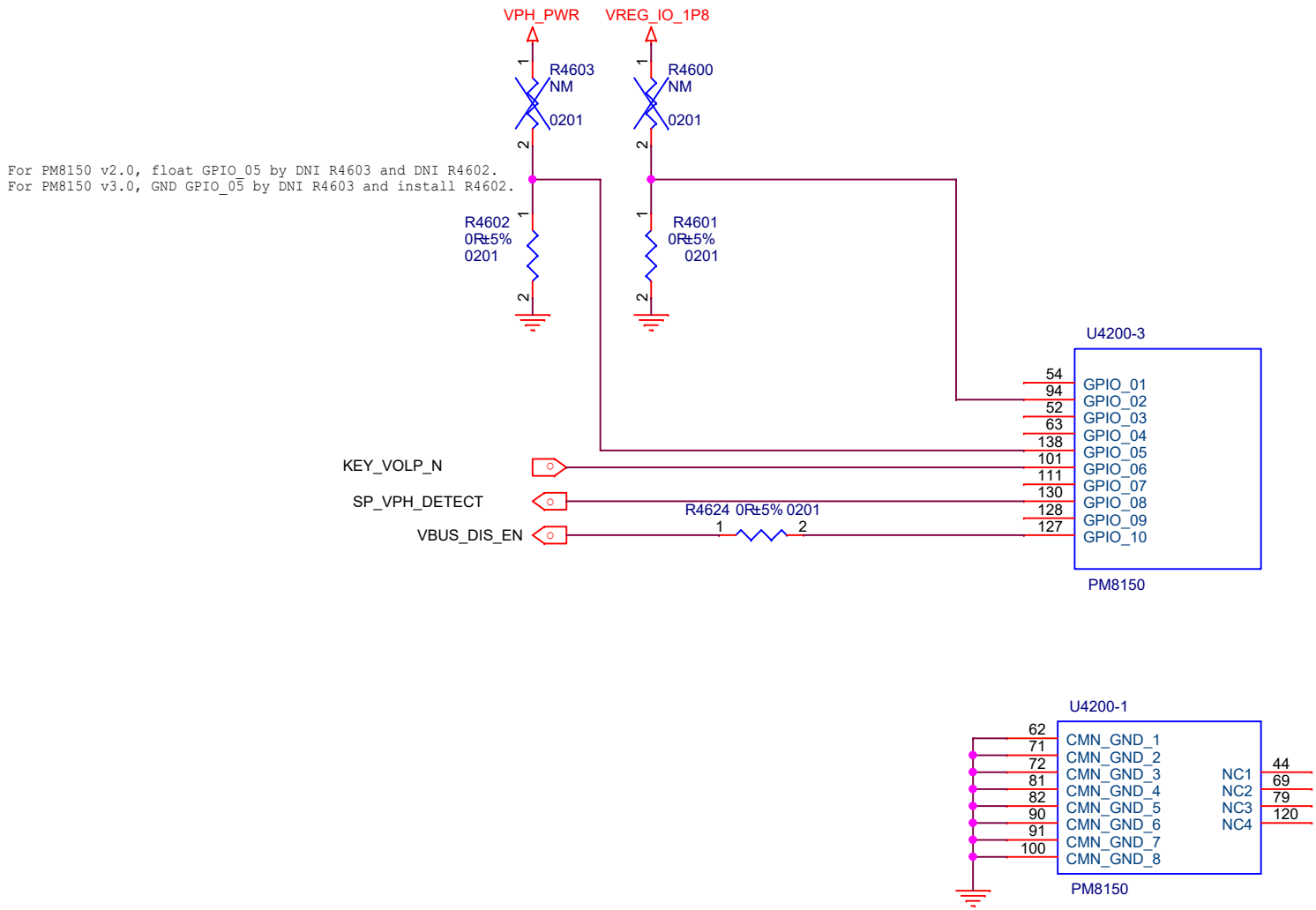

Title	F1 MAIN
Size A4	Document Number PM855 GPIO&GND
Date: Monday, July 29, 2019	Sheet

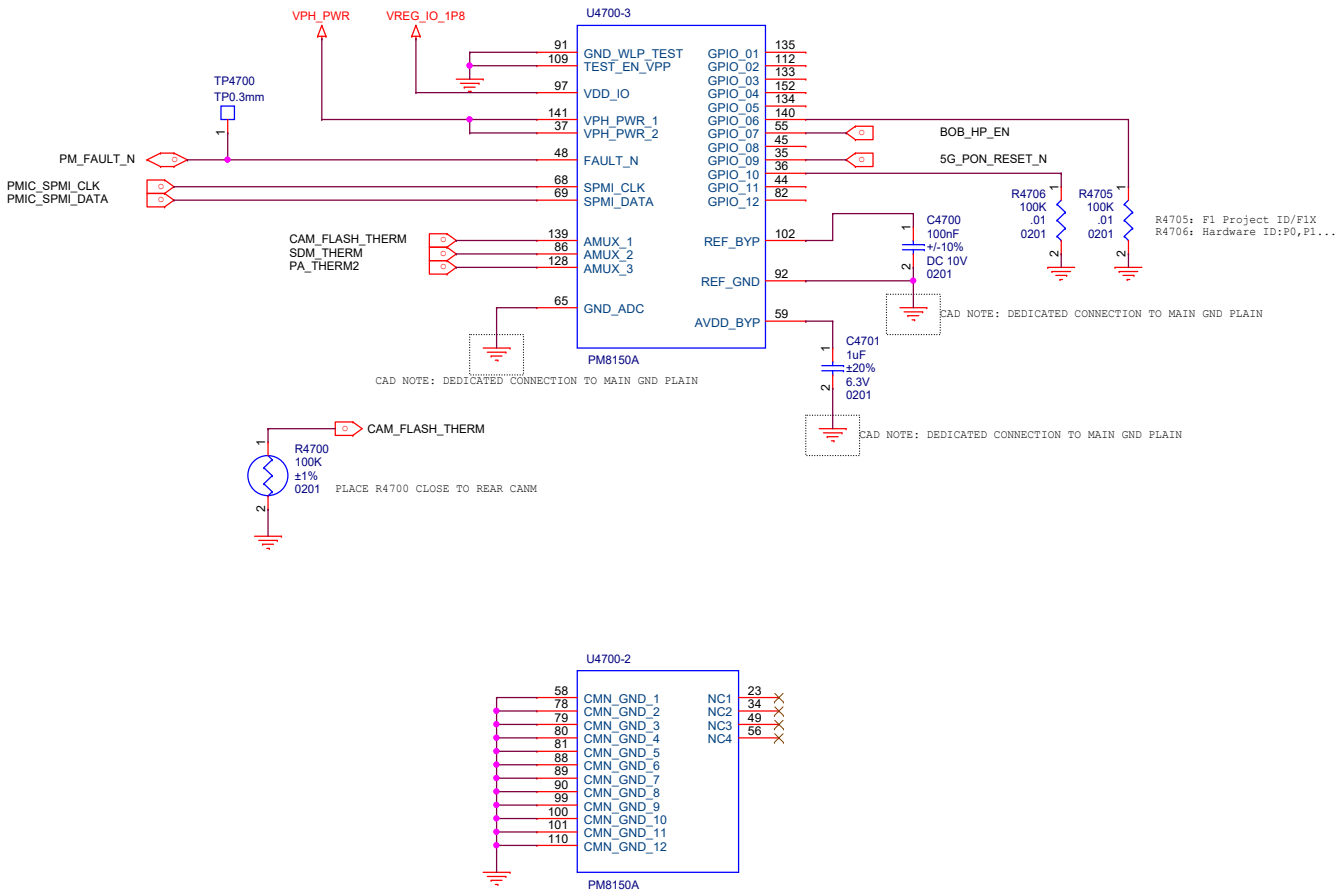

Title	F1 MAIN
Size A3	Document Number PM855A CTRL&GND
Date: Monday, July 29, 2019	Sheet

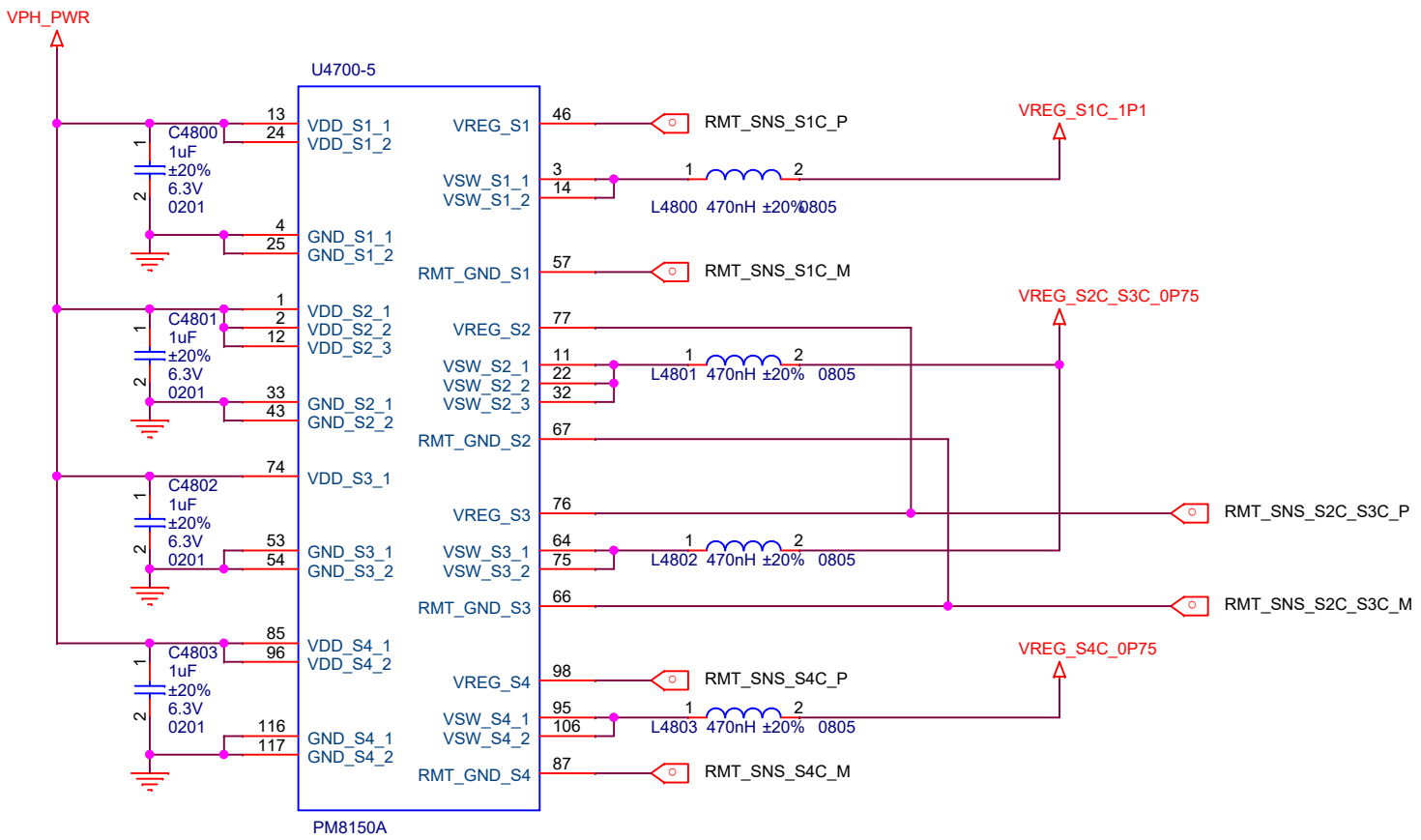

Title	F1 MAIN
Size A4	Document Number PM855A BUCK CONVERTER1
Date: Monday, July 29, 2019	Sheet

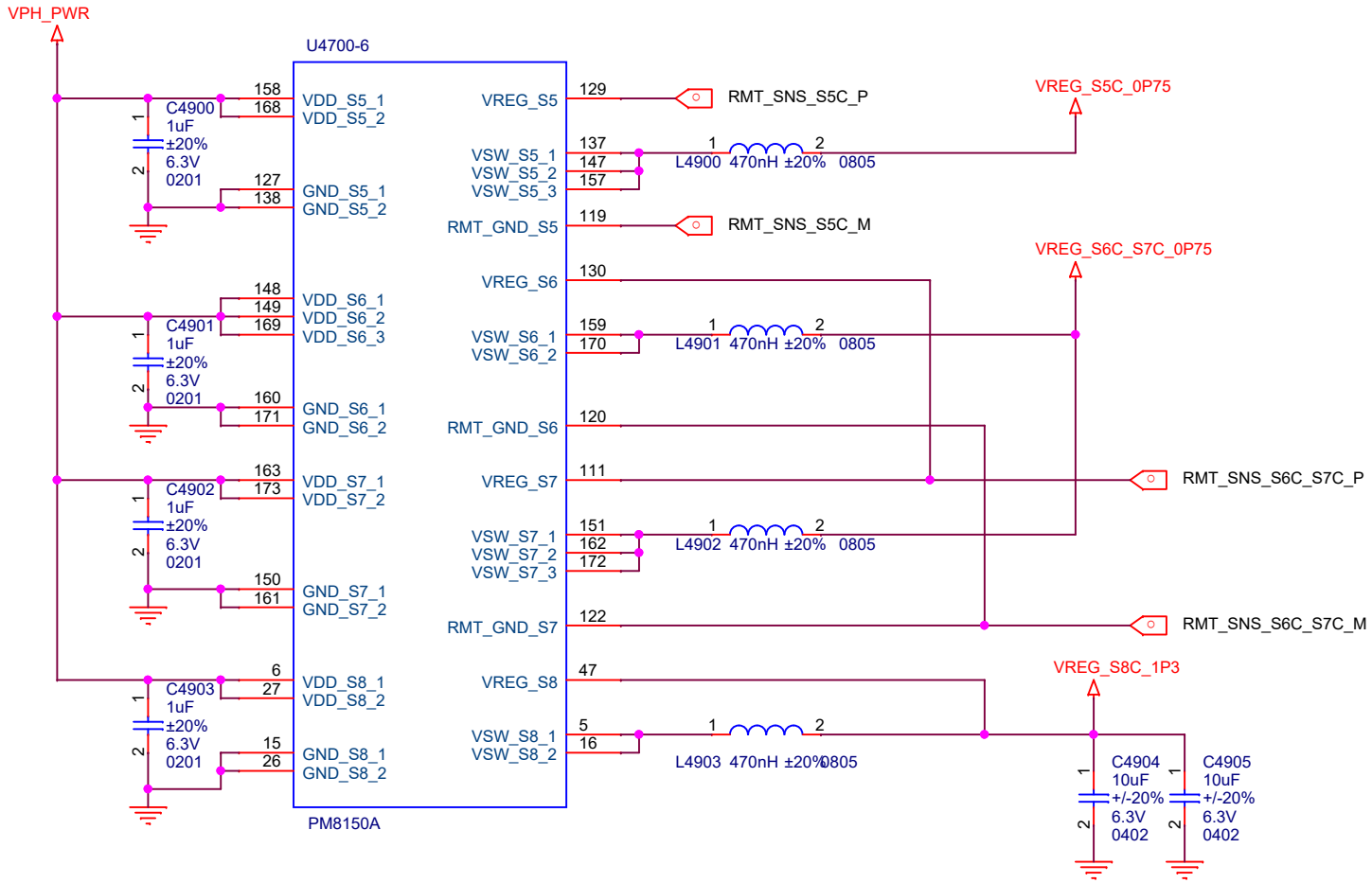

Title	F1 MAIN
Size A4	Document Number PM855A BUCK CONVERTER2
Date: Monday, July 29, 2019	Sheet

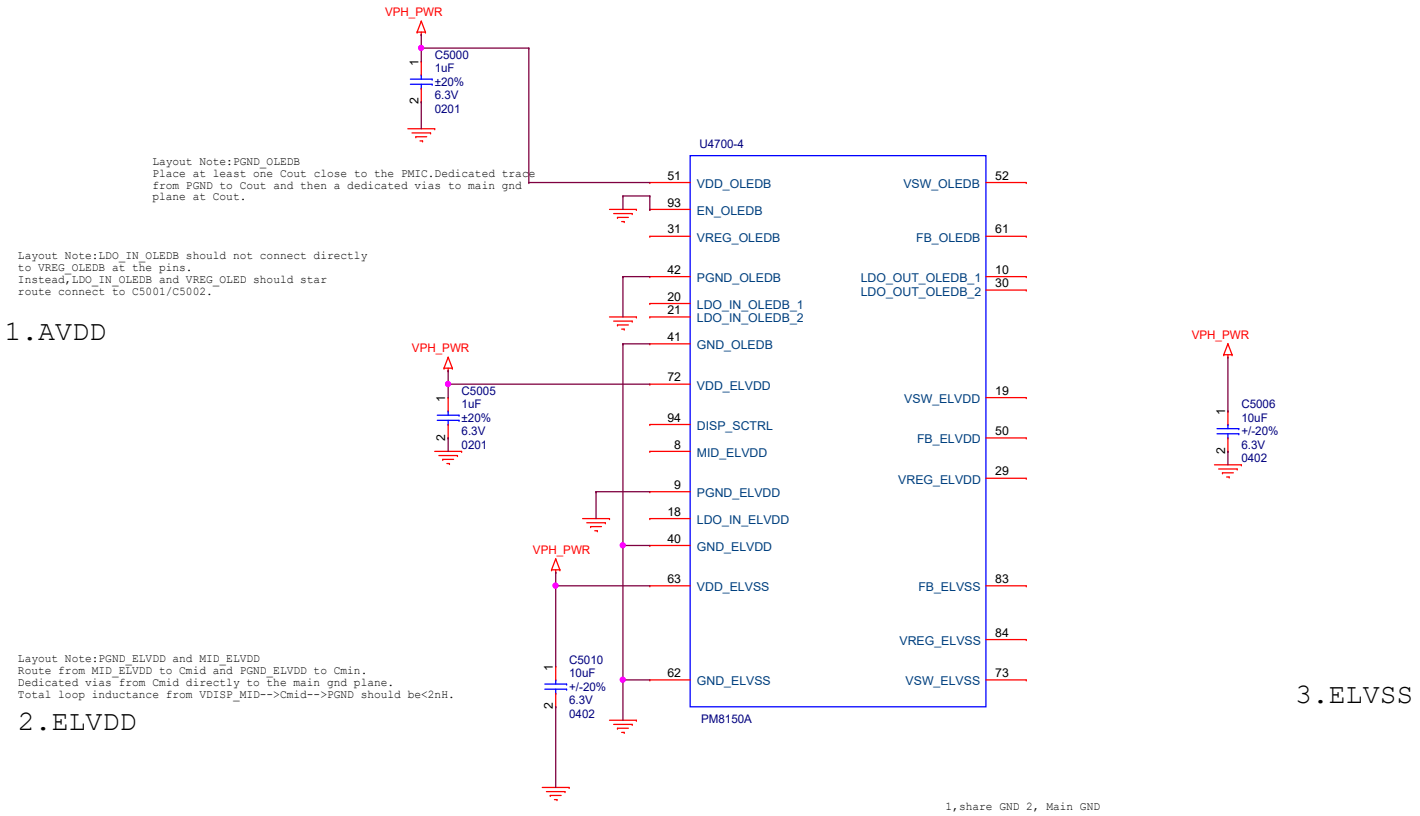

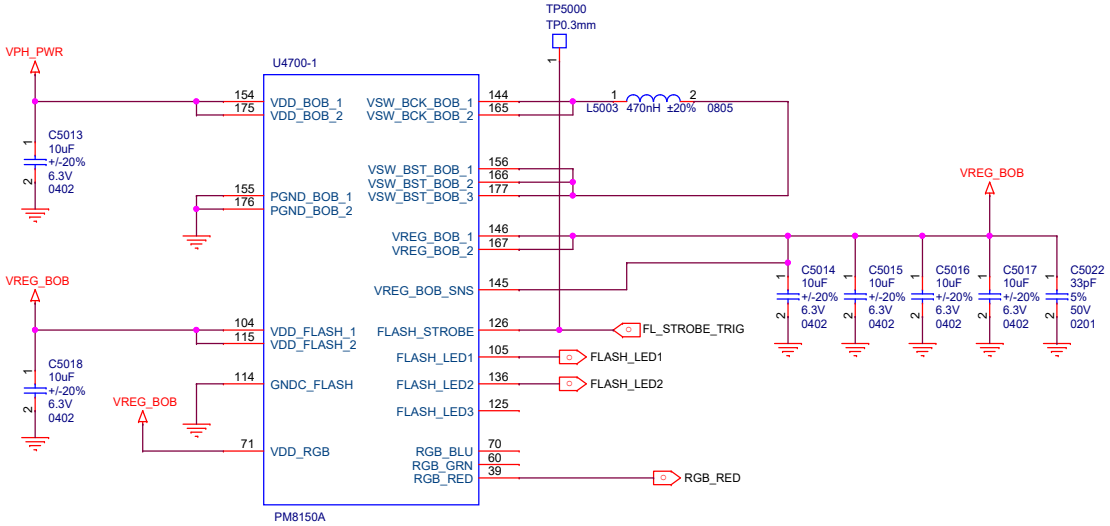

Title	F1 MAIN
Size A3	Document Number PM855A AMOLED&BOB&FLASH
Date: Monday, July 29, 2019	Sheet

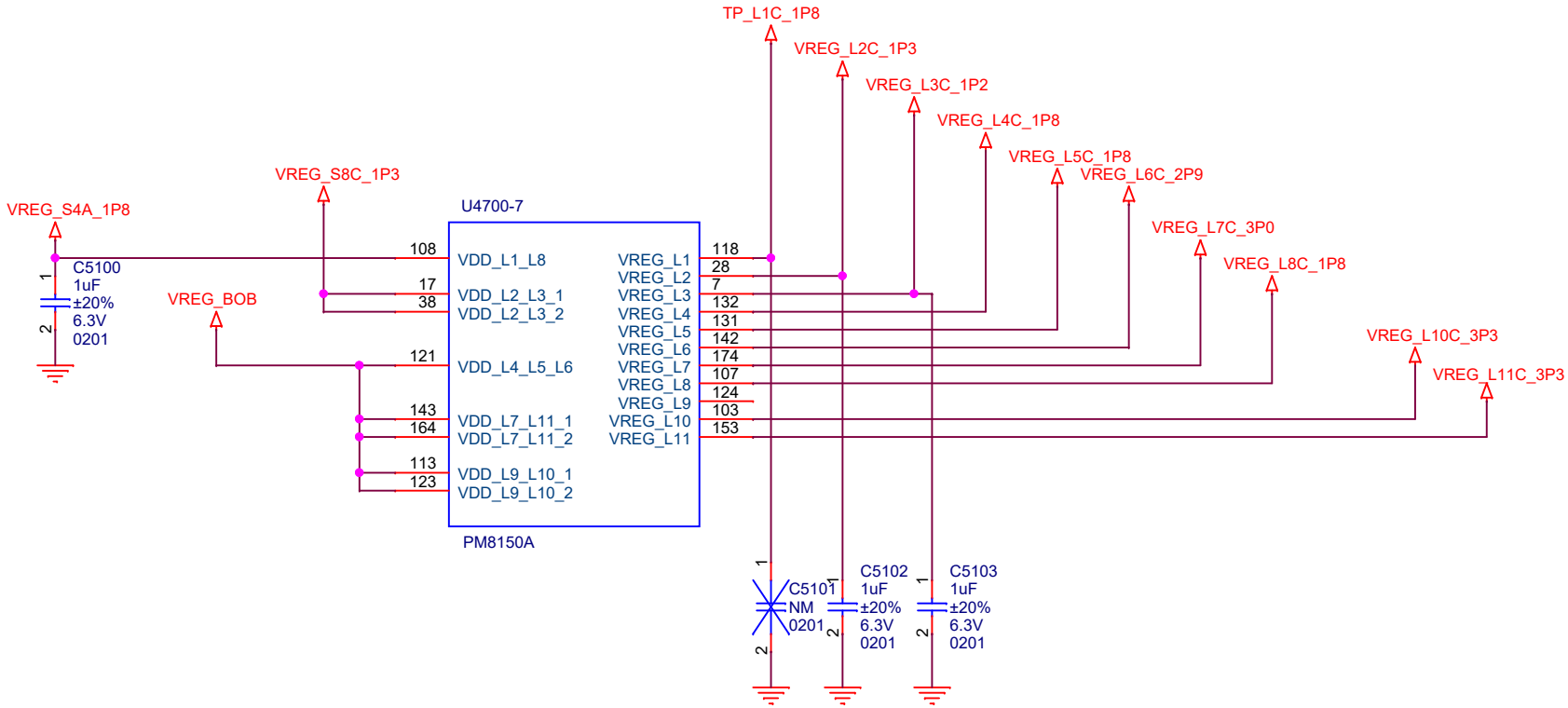

Title	F1 MAIN	
Size A4	Document Number PM855A LDOs	
Date: Monday, July 29, 2019	Sheet	

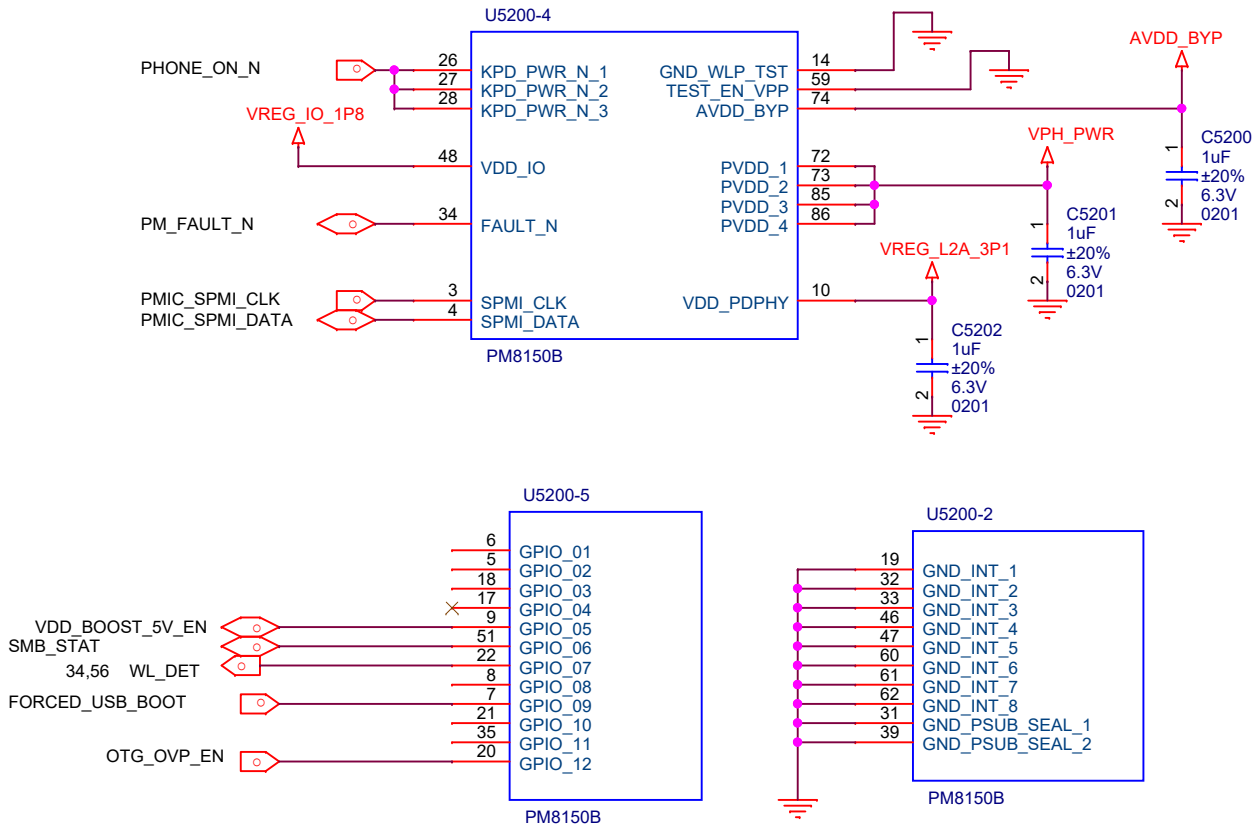

Note: GPIO_04 and GPIO_11 of PM8150B are for internal usage. Keep them float.
Keep GPIO_03 of PM8150B float. Don't use it for other purpose.
GPIO_06 of PM8150B is dedicated for SMB_STAT. Don't use it for other purpose.

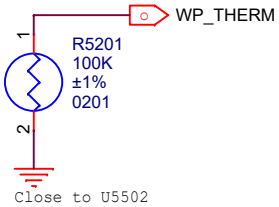

Title	F1 MAIN
Size A4	Document Number PM855B CTRL&GND
Date: Monday, July 29, 2019	Sheet

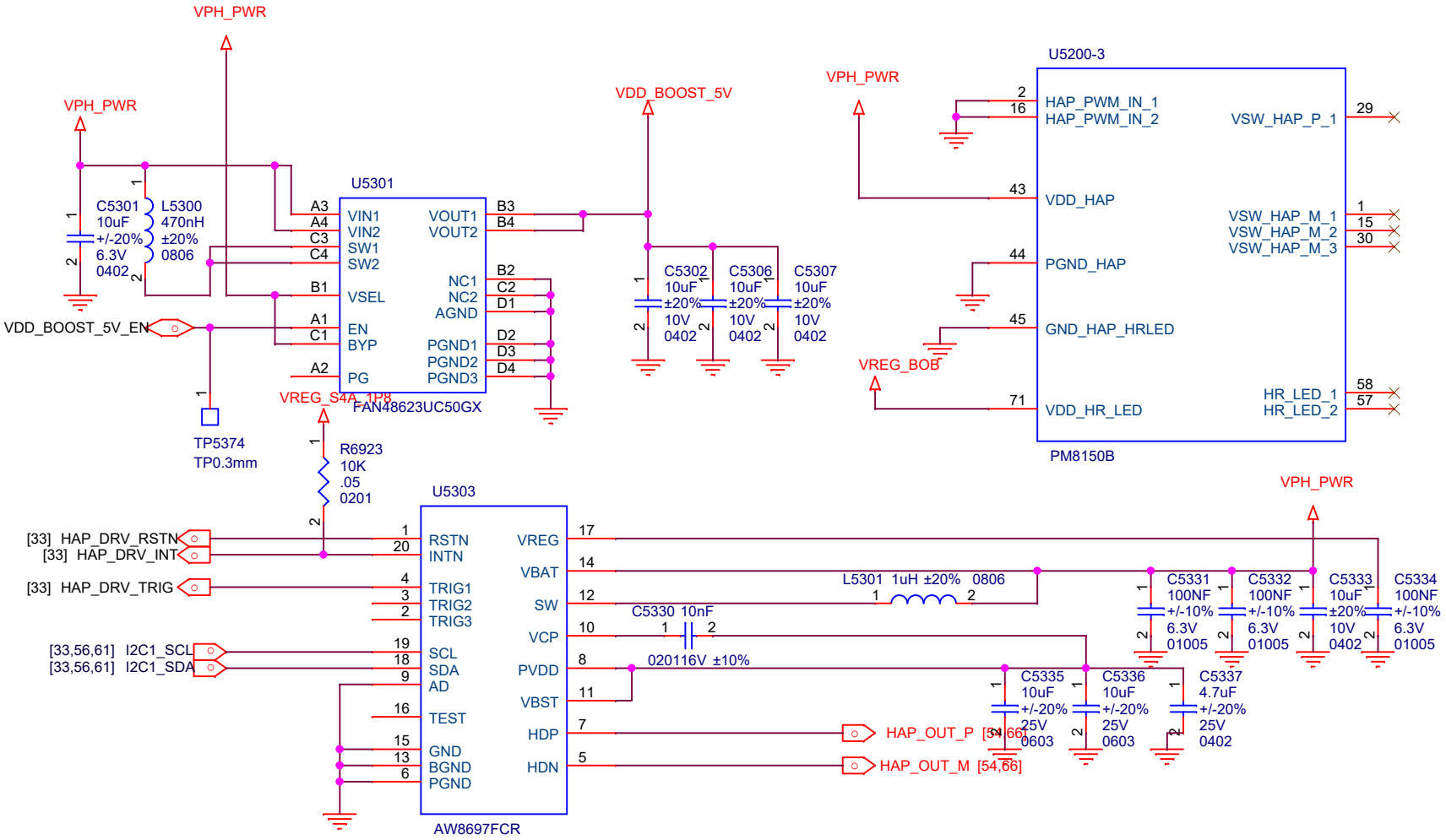

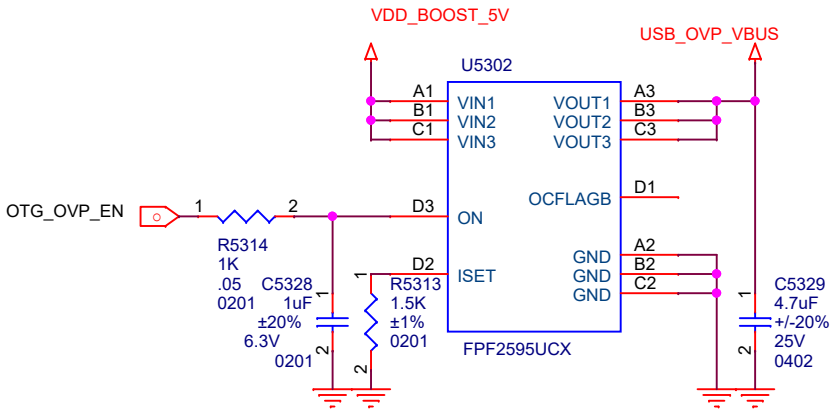

RsetΩ	Min. Current mA	Typ Current mA	Max. Current mA

Title	F1 MAIN
Size A4	Document Number PM855B HAPTIC
Date: Monday, July 29, 2019	Sheet

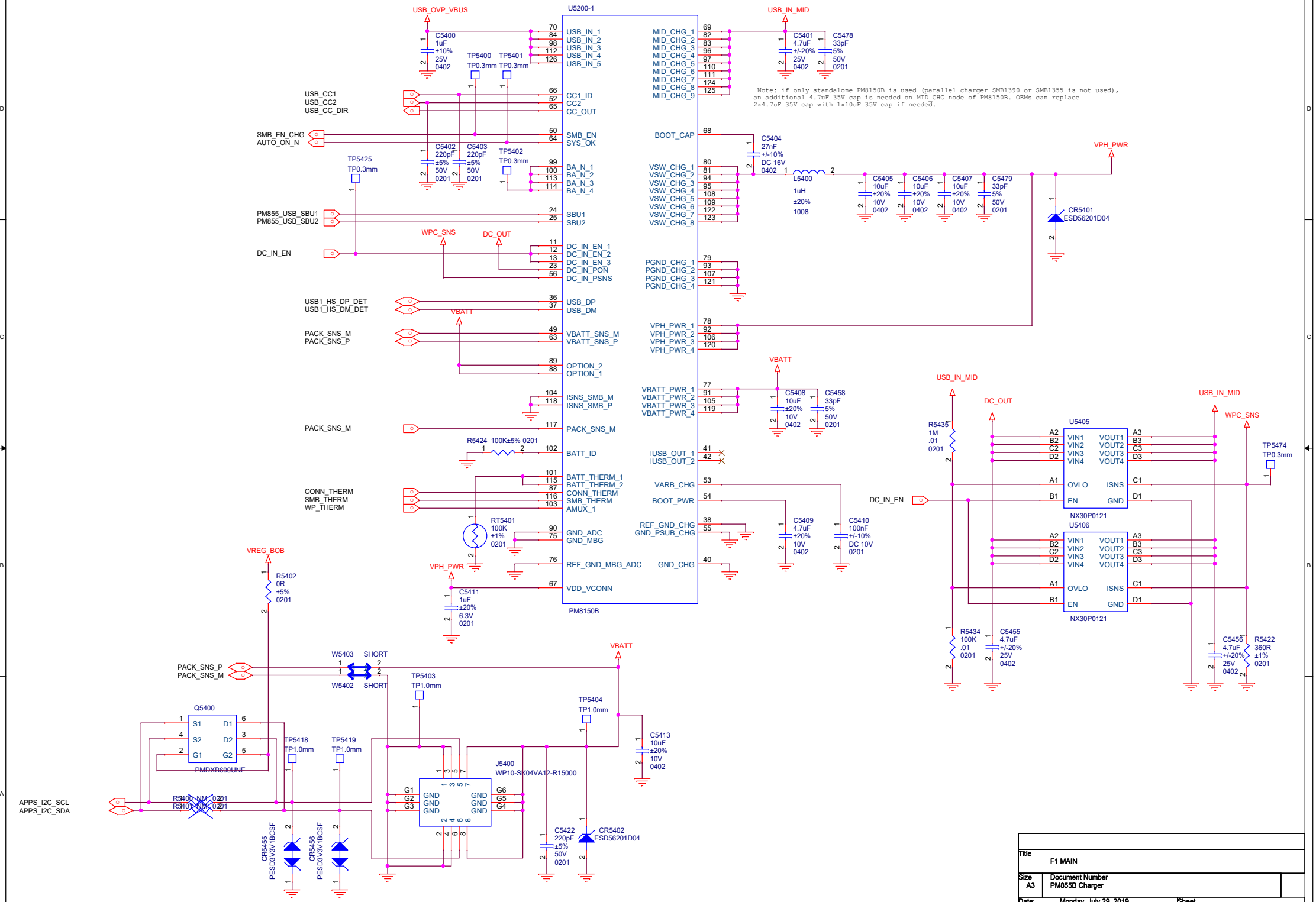
U5200-1
PM8150B
USB_OVP_VBUS
C5400 1uF ±10% 25V 0402
TP5400 TP0.3mm
TP5401 TP0.3mm
USB_IN_1
USB_IN_2
USB_IN_3
USB_IN_4
USB_IN_5
USB_IN_MID
C5401 4.7uF +/-20% 25V 0402
C5478 33pF 5% 50V 0201
MID_CHG_1
MID_CHG_2
MID_CHG_3
MID_CHG_4
MID_CHG_5
MID_CHG_6
MID_CHG_7
MID_CHG_8
MID_CHG_9
Note: if only standalone PM8150B is used (parallel charger SMB1390 or SMB1355 is not used), an additional 4.7uF 35V cap is needed on MID_CHG node of PM8150B. OEMs can replace 2x4.7uF 35V cap with 1x10uF 35V cap if needed.
USB_CC1
USB_CC2
USB_CC_DIR
CC1_ID
CC2
CC_OUT
SMB_EN_CHG
AUTO_ON_N
SMB_EN
SYS_OK
BOOT_CAP
C5404 27nF +/-10% DC 16V 0402
C5402 220pF ±5% 50V 0201
C5403 220pF ±5% 50V 0201
TP5402 TP0.3mm
TP5425 TP0.3mm
BA_N_1
BA_N_2
BA_N_3
BA_N_4
VSW_CHG_1
VSW_CHG_2
VSW_CHG_3
VSW_CHG_4
VSW_CHG_5
VSW_CHG_6
VSW_CHG_7
VSW_CHG_8
L5400 1uH ±20% 1008
C5405 10uF ±20% 10V 0402
C5406 10uF ±20% 10V 0402
C5407 10uF ±20% 10V 0402
C5479 33pF 5% 50V 0201
VPH_PWR
CR5401 ESD56201D04
PM855_USB_SBU1
PM855_USB_SBU2
SBU1
SBU2
WPC_SNS
DC_OUT
DC_IN_EN
DC_IN_EN_1
DC_IN_EN_2
DC_IN_EN_3
DC_IN_PON
DC_IN_PSNS
PGND_CHG_1
PGND_CHG_2
PGND_CHG_3
PGND_CHG_4
USB1_HS_DP_DET
USB1_HS_DM_DET
USB_DP
USB_DM
VBATT
PACK_SNS_M
PACK_SNS_P
VBATT_SNS_M
VBATT_SNS_P
VPH_PWR_1
VPH_PWR_2
VPH_PWR_3
VPH_PWR_4
OPTION_2
OPTION_1
VBATT_PWR_1
VBATT_PWR_2
VBATT_PWR_3
VBATT_PWR_4
C5408 10uF ±20% 10V 0402
C5458 33pF 5% 50V 0201
ISNS_SMB_M
ISNS_SMB_P
PACK_SNS_M
R5424 100K±5% 0201
BATT_ID
IUSB_OUT_1
IUSB_OUT_2
BATT_THERM_1
BATT_THERM_2
CONN_THERM
SMB_THERM
AMUX_1
CONN_THERM
SMB_THERM
WP_THERM
VARB_CHG
BOOT_PWR
RT5401 100K ±1% 0201
GND_ADC
GND_MBG
REF_GND_CHG
GND_PSUB_CHG
C5409 4.7uF ±20% 10V 0402
C5410 100nF +/-10% DC 10V 0201
REF_GND_MBG_ADC
GND_CHG
VDD_VCONN
VREG_BOB
R5402 0R ±5% 0201
C5411 1uF ±20% 6.3V 0201
USB_IN_MID
DC_OUT
WPC_SNS
R5435 1M .01 0201
U5405
U5406
VIN1 VIN2 VIN3 VIN4
VOUT1 VOUT2 VOUT3 VOUT4
OVLO
ISNS
EN
GND
NX30P0121
TP5474 TP0.3mm
R5434 100K .01 0201
C5455 4.7uF +/-20% 25V 0402
C5456 4.7uF +/-20% 25V 0402
R5422 360R ±1% 0201
W5403 SHORT
W5402 SHORT
PACK_SNS_P
PACK_SNS_M
TP5403 TP1.0mm
TP5404 TP1.0mm
C5413 10uF ±20% 10V 0402
Q5400
S1 S2 G1 D1 D2 G2
PMDXB600UNE
TP5418 TP1.0mm
TP5419 TP1.0mm
J5400
WP10-SK04VA12-R15000
GND
G1 G2 G3 G4 G5 G6
APPS_I2C_SCL
APPS_I2C_SDA
R5400 NM 0201
R5401 NM 0201
CR5455 PESD3V3V1BCSF
CR5456 PESD3V3V1BCSF
C5422 220pF ±5% 50V 0201
CR5402 ESD56201D04
Title
F1 MAIN
Size A3
Document Number
PM855B Charger
Date: Monday, July 29, 2019
Sheet

SMB1390

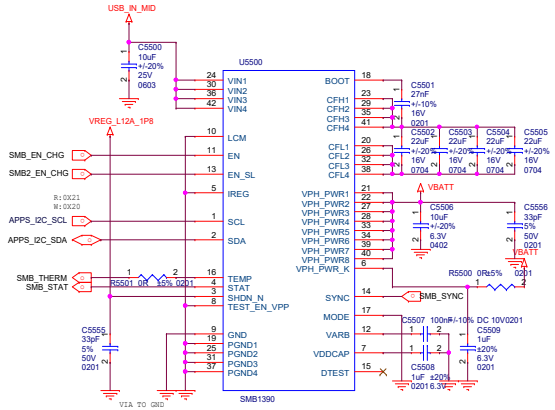

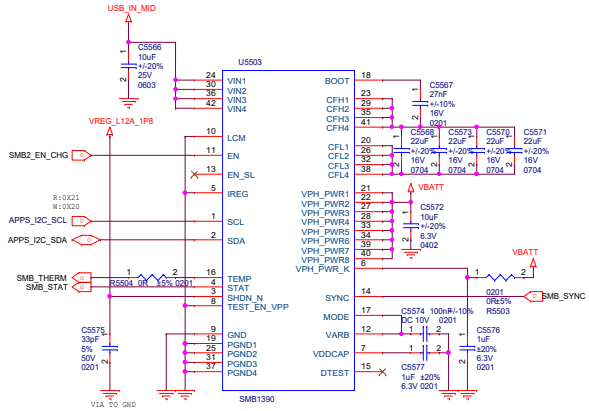

Wireless-POWER

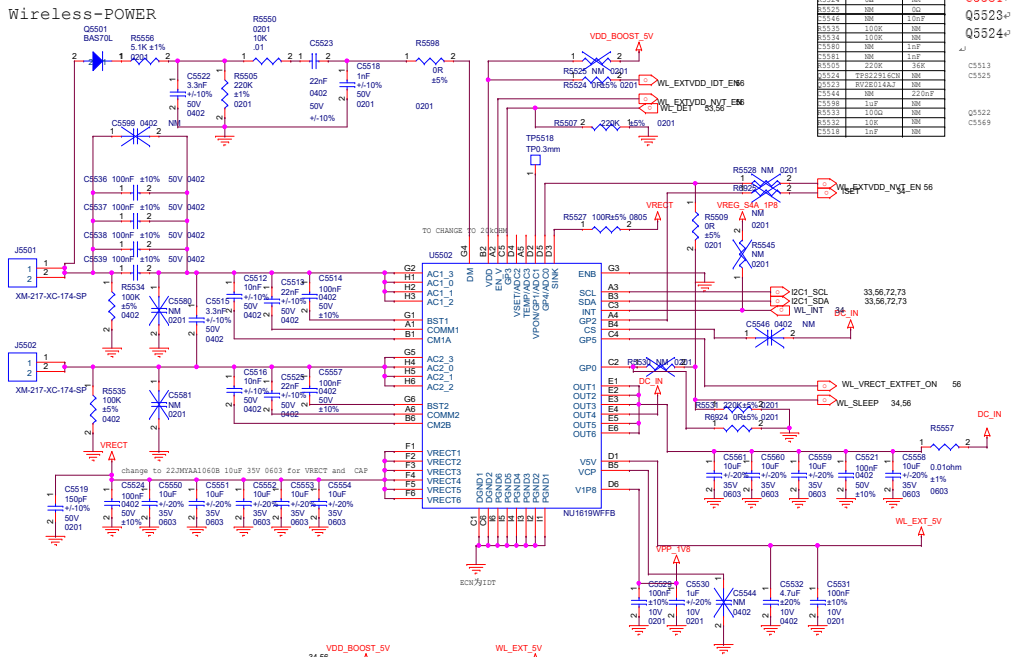

	IDT9415	NU1619
C5523	22nF	10nF
R5527	100Ω	620Ω
R5528	NM	0Ω
R5509	0Ω	NM
R6924	0Ω	NM
R5530	NM	0Ω
R5524	0Ω	NM
R5525	NM	0Ω
C5546	NM	10nF
R5535	100K	NM
R5534	100K	NM
C5580	NM	1nF
C5581	NM	1nF
R5505	220K	36K
Q5524	TPS22916CN	NM
Q5523	RV2E014AJ	NM
C5544	NM	220nF
C5598	1uF	NM
R5533	100Ω	NM
R5532	10K	NM
C5518	1nF	NM

	MB1	MB2
	C5544_NM	C5544
	C5580_NM	C5580
	C5581_NM	C5581
	C5581	C5582
	Q5523	Q5523_NM
	Q5524	Q5524_NM
C5513	22nF	22nF
C5525	22nF	22nF
Q5522	NM	NM
C5569	1uF	1uF

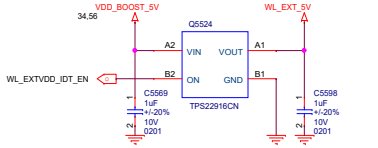

Only for P9415 solution

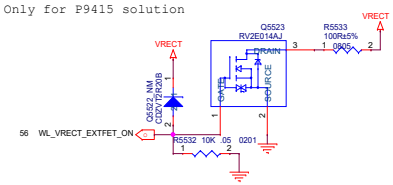

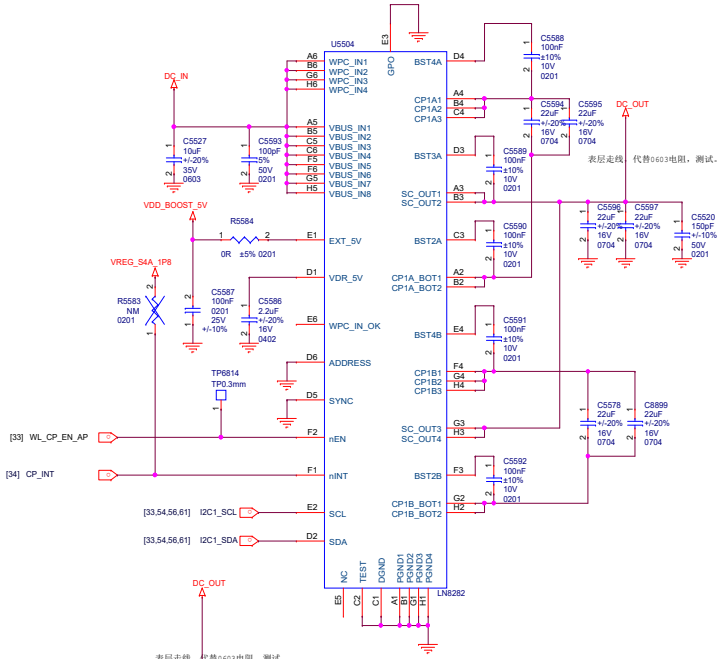

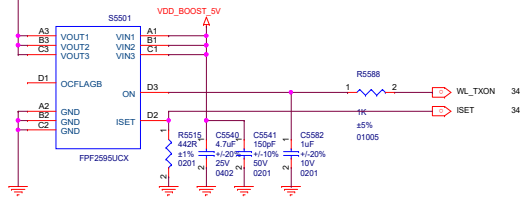

RsetΩ	Min. Current mA	Typ Current mA	Max. Current mA
415	2250	2500	2750
460	2025	2250	2475
520	1800	2000	2200

Title	F1 MAIN
Size A2	Document Number SMB1390BWL POWER
Date:	Monday, July 29, 2019

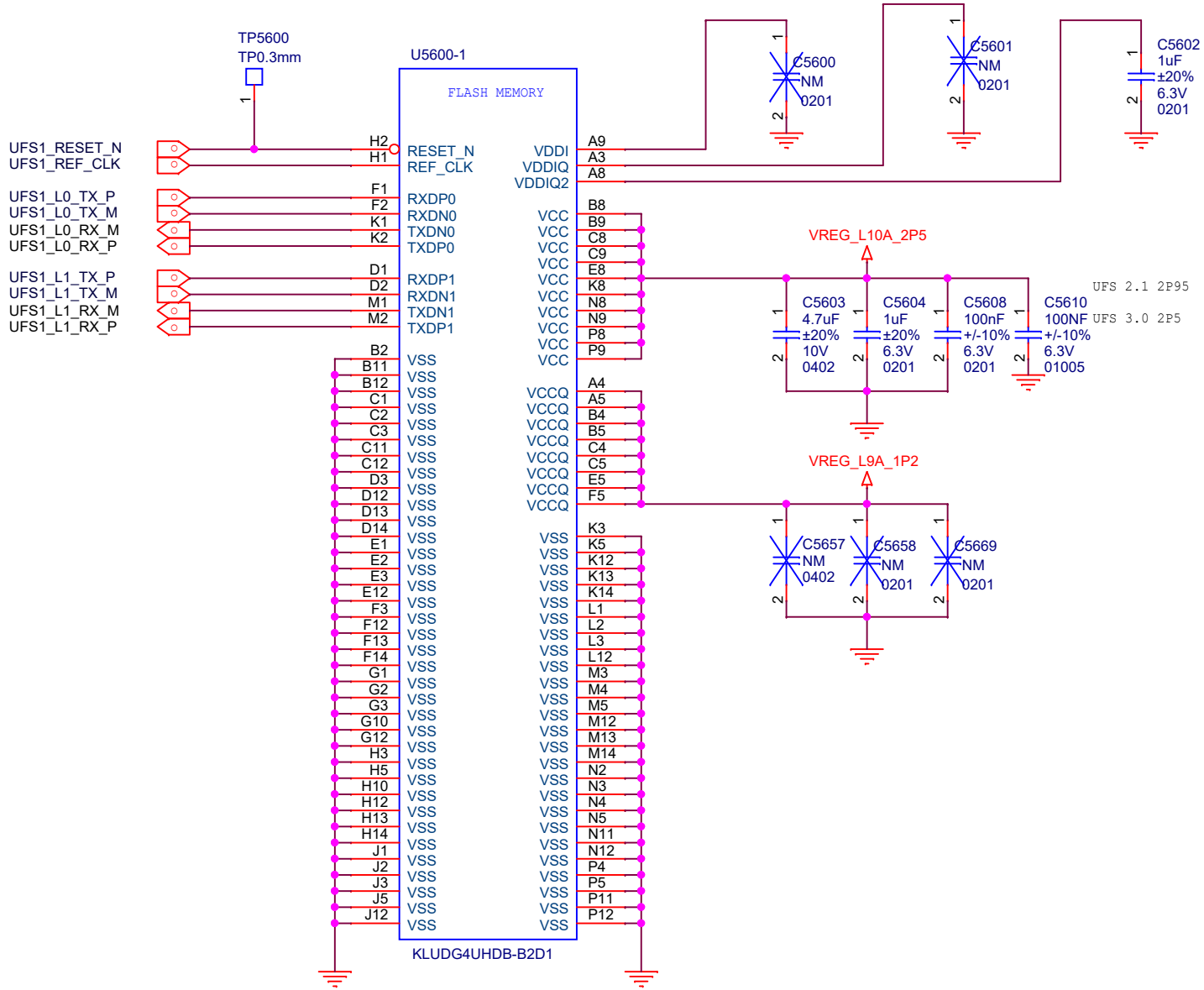

Title	F1 MAIN
Size A4	Document Number MEMORY
Date: Monday, July 29, 2019	Sheet

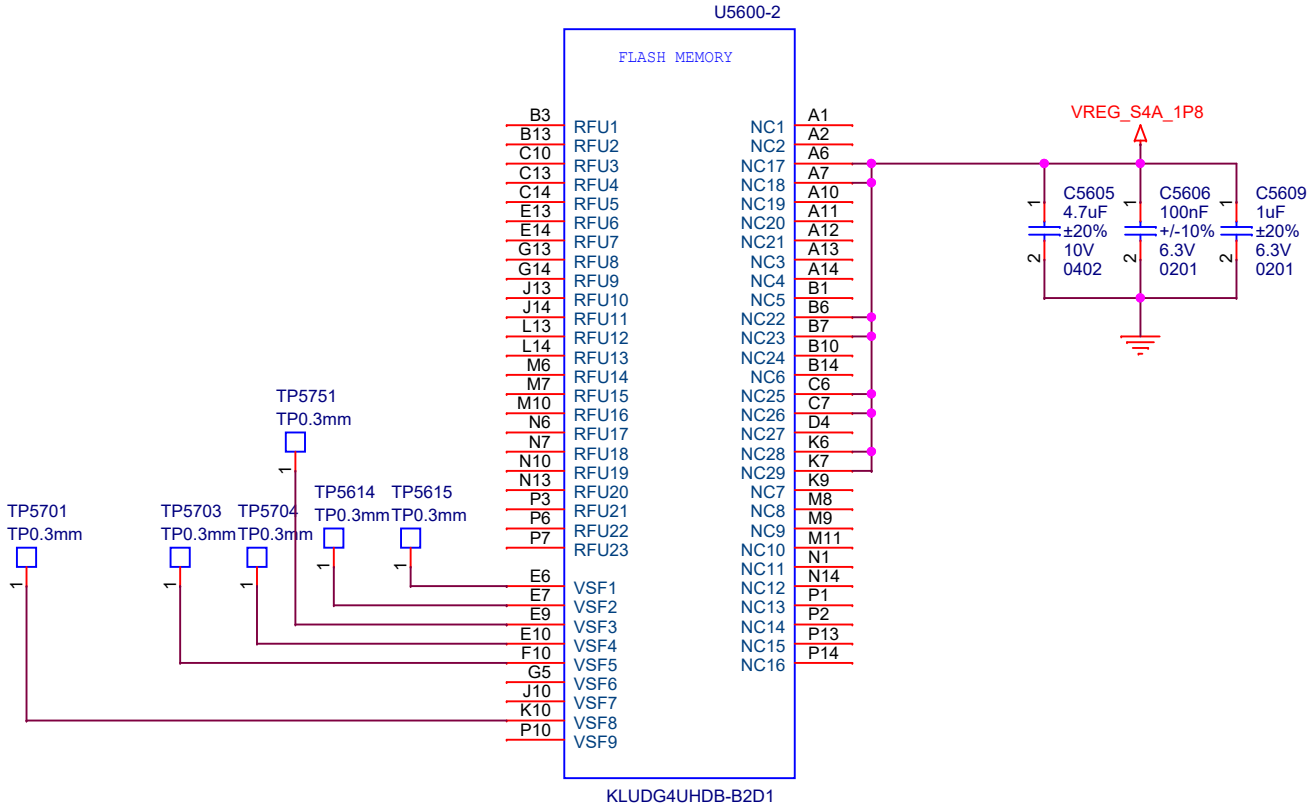

Title	F1 MAIN
Size A4	Document Number MEMORY-2
Date: Monday, July 29, 2019	Sheet

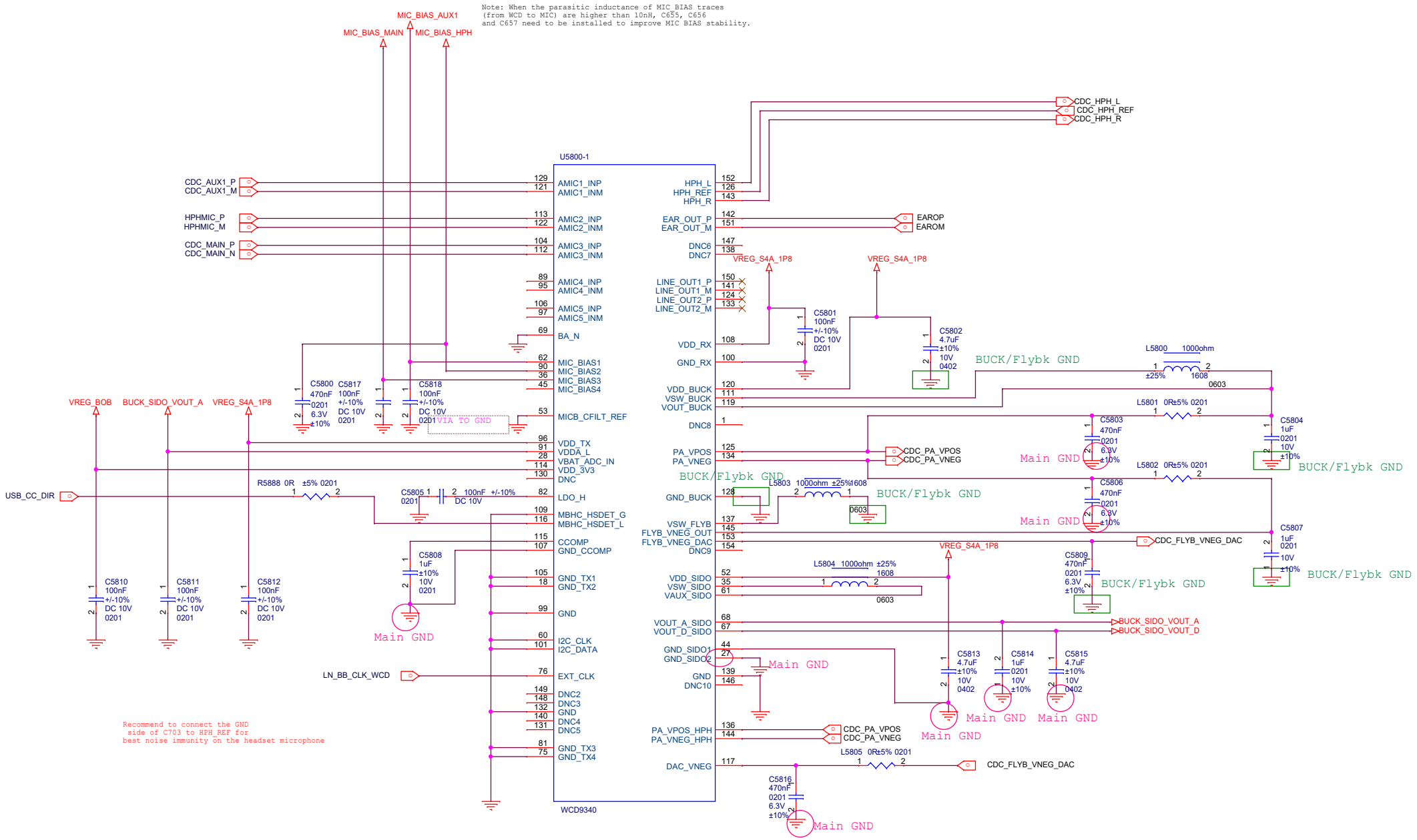

Title	F1 MAIN
Size A3	Document Number WCD9340-1
Date: Monday, July 29, 2019	Sheet

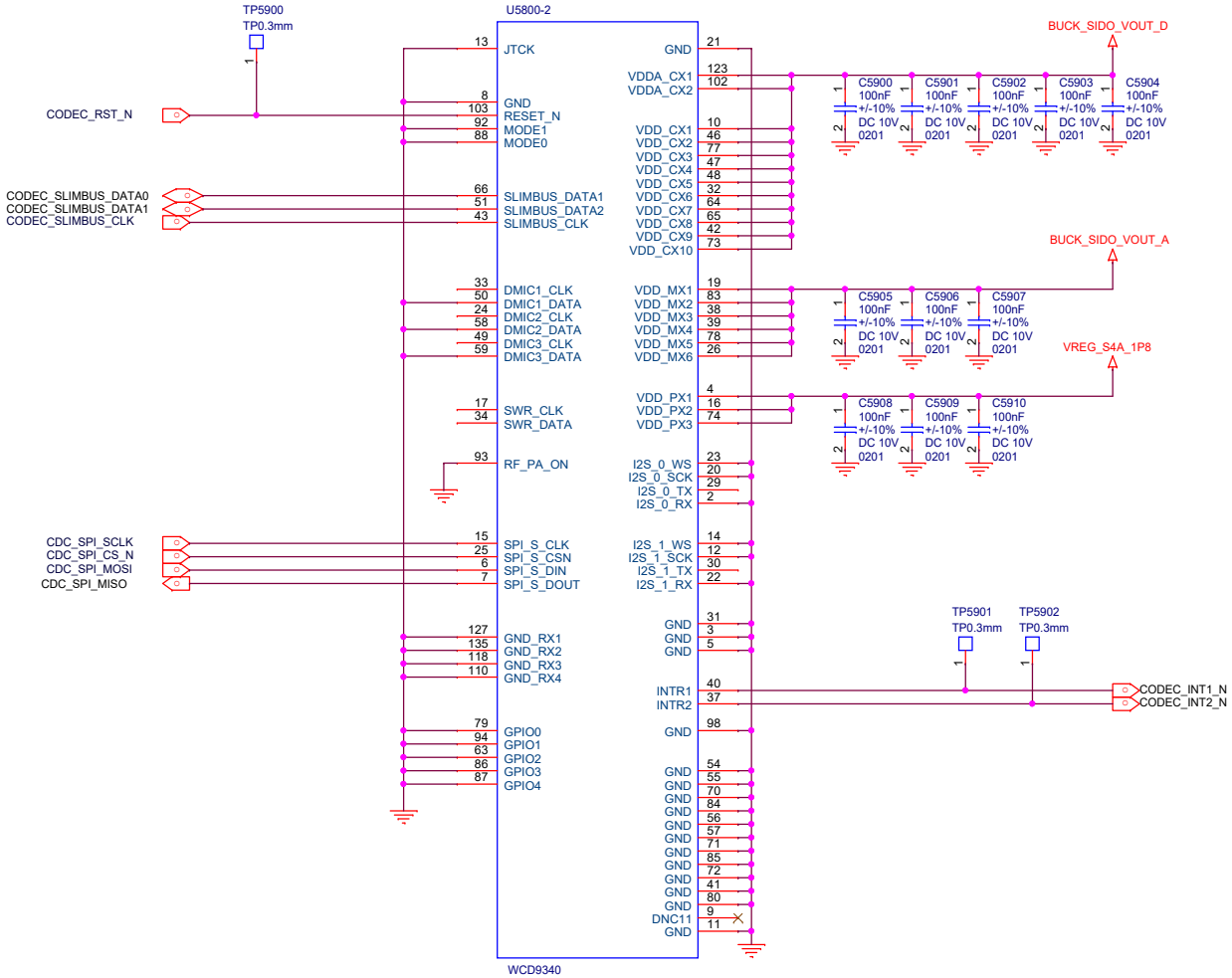

Title	F1 MAIN
Size A3	Document Number WCD9340-2
Date: Monday, July 29, 2019	Sheet

Receiver

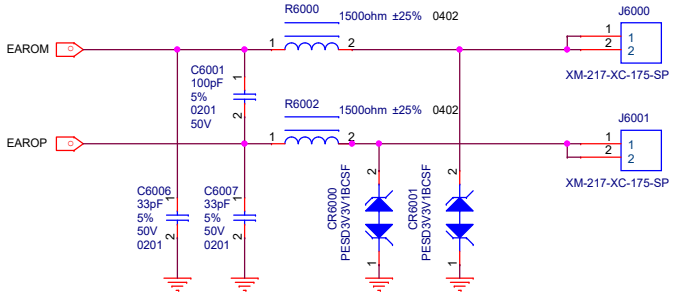

AUX MIC

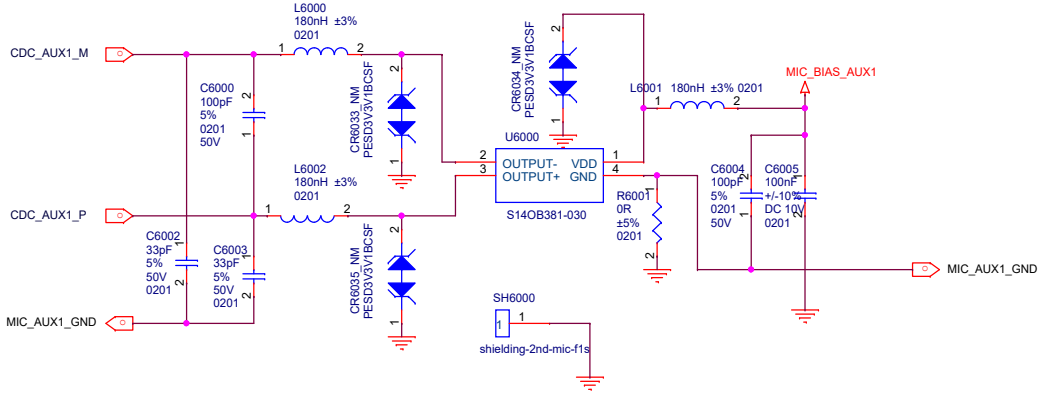

HEADSET

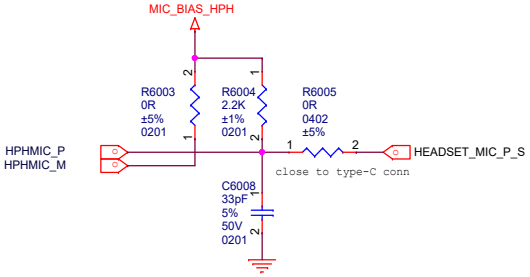

UART SWITCH

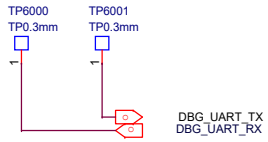

Title	F1 MAIN
Size A3	Document Number Reserved(for AUDIO)
Date: Monday, July 29, 2019	Sheet

L-sensor

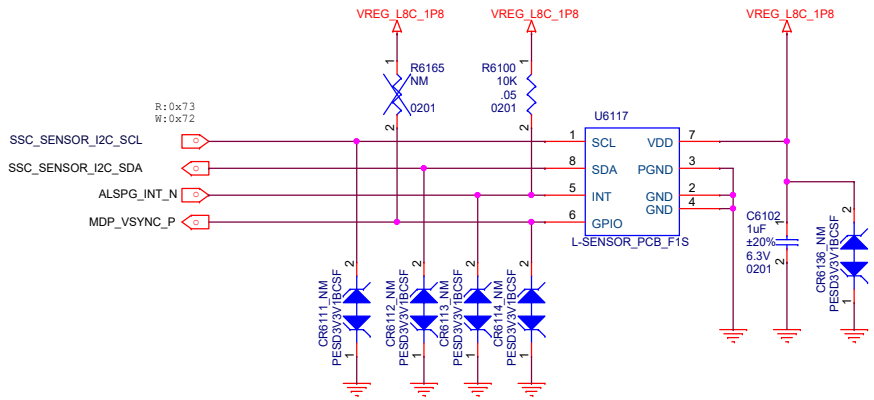

P-sensor

W-LED

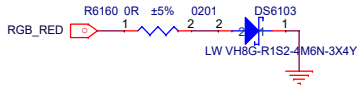

Below OLED

A+G

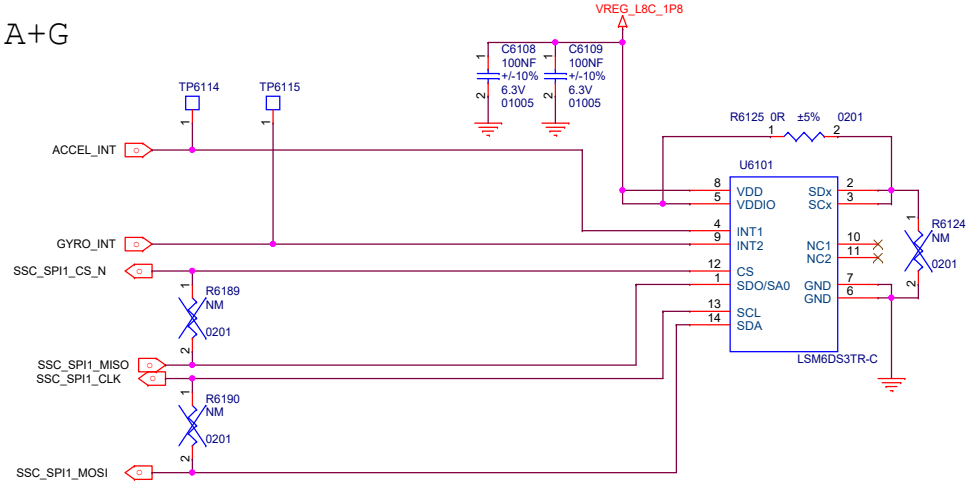

PRESSURE

Sidekey

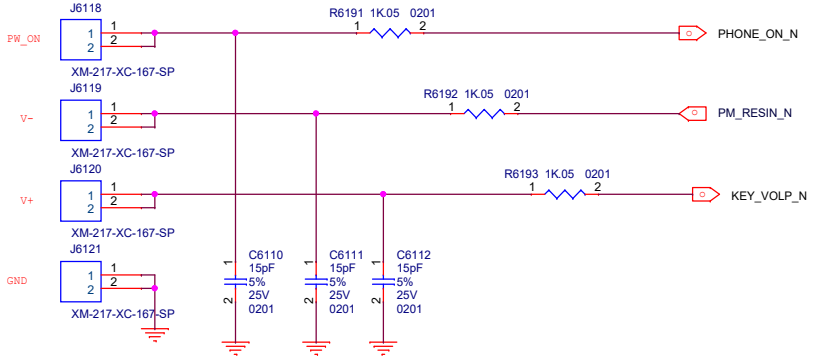

Title	F1 MAIN
Size A3	Document Number SENSOR
Date: Monday, July 29, 2019	Sheet

AI

COMPASS

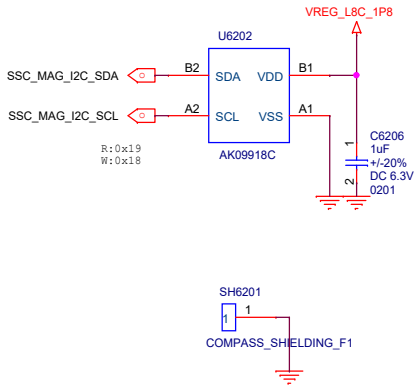

TOF&FLASH

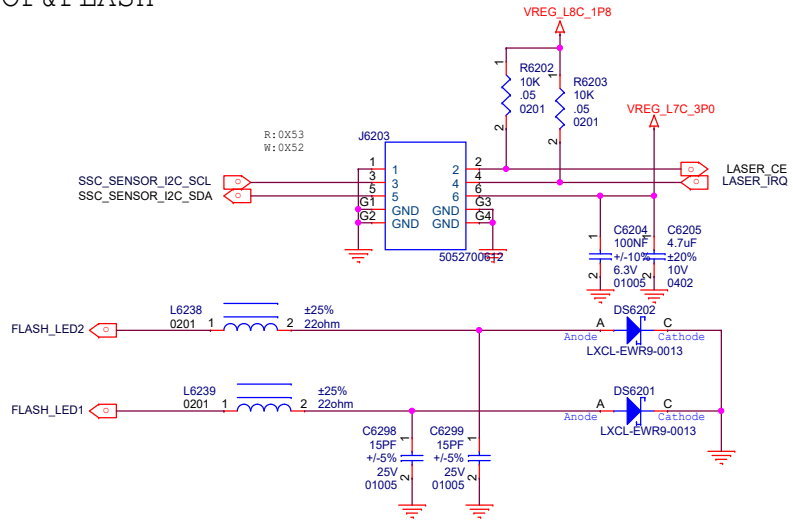

HALL

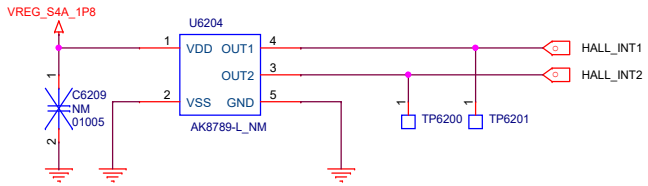

INFARED

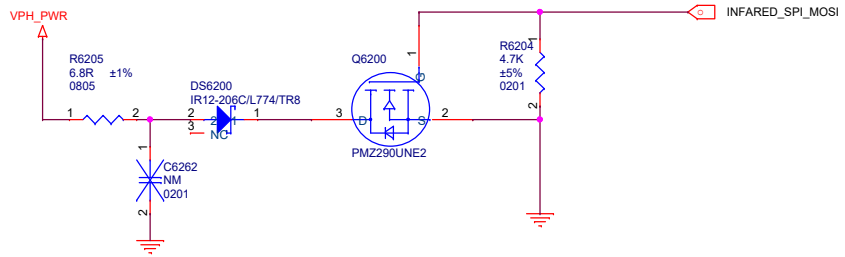

Title	F1 MAIN
Size A3	Document Number SENSOR-2
Date: Monday, July 29, 2019	Sheet

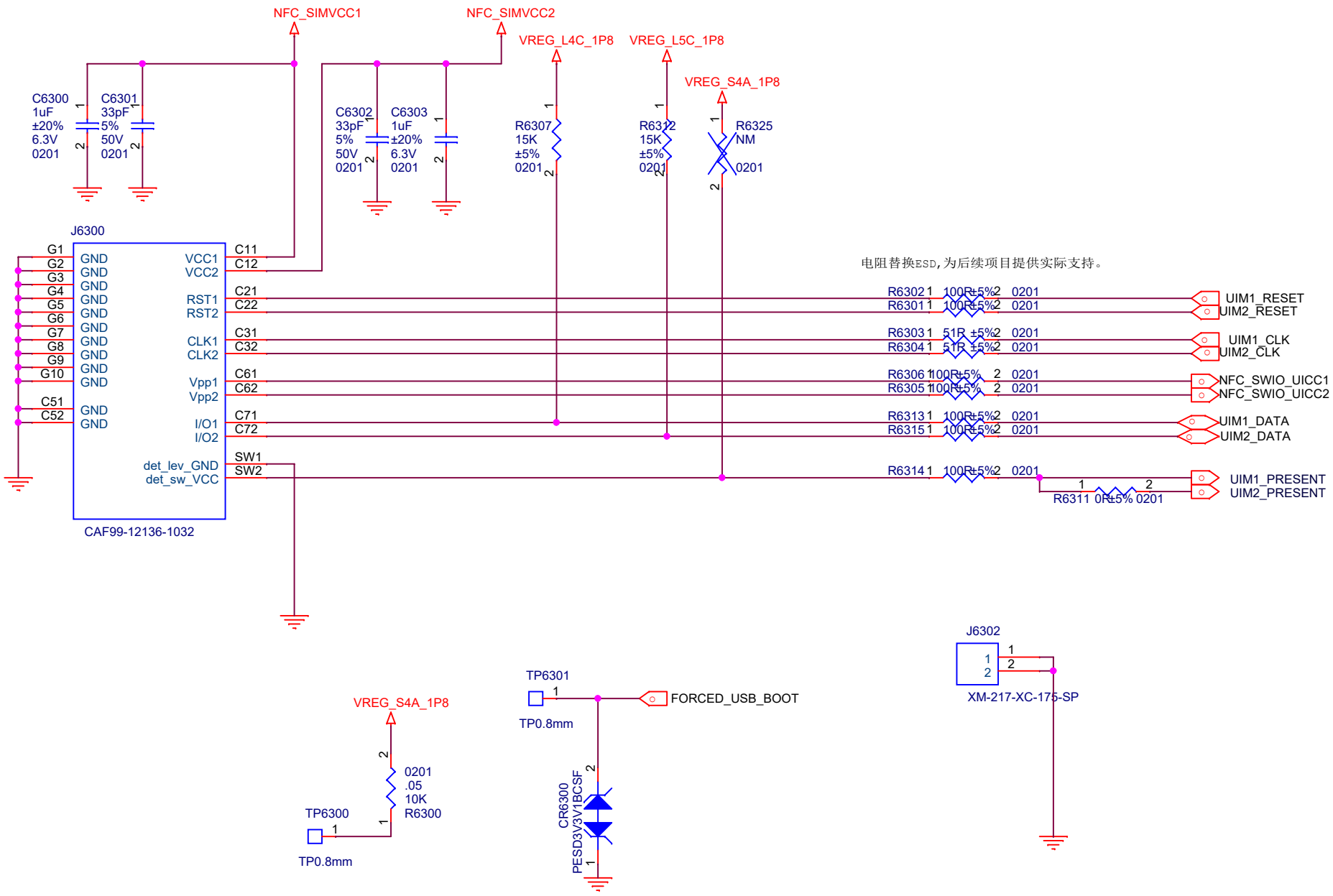

Title	F1 MAIN
Size A4	Document Number SIM
Date: Monday, July 29, 2019	Sheet

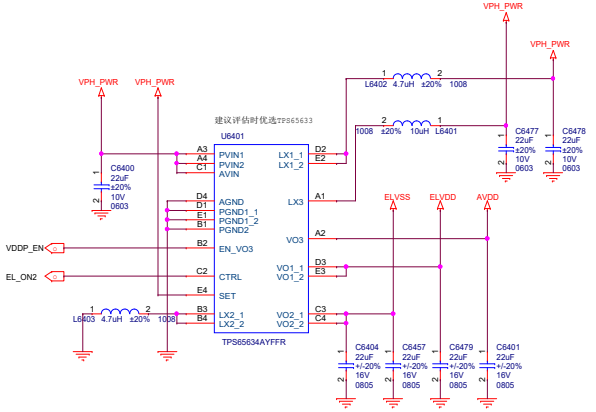

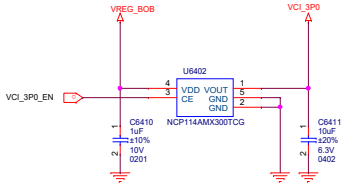

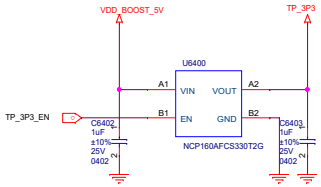

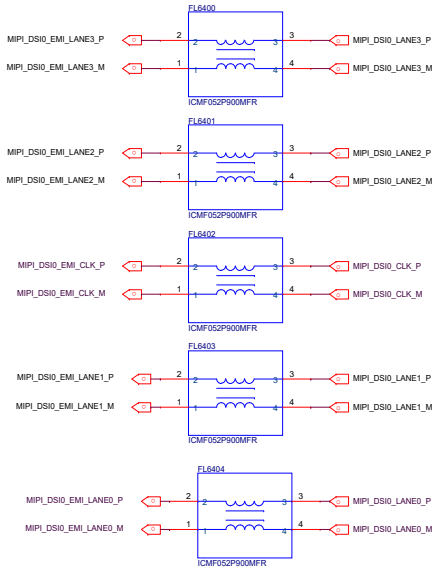

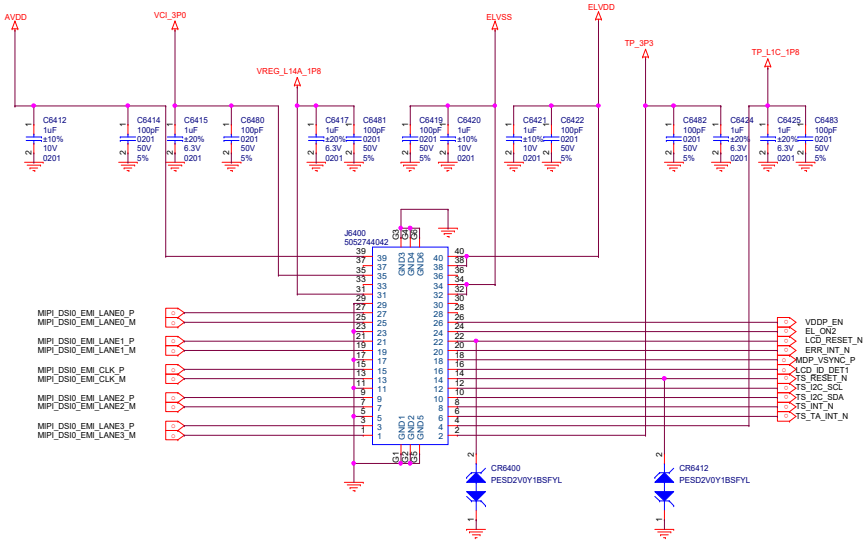

Title	F1 MAIN
Size A2	Document Number AMOLED
Date:	Monday, July 29, 2019

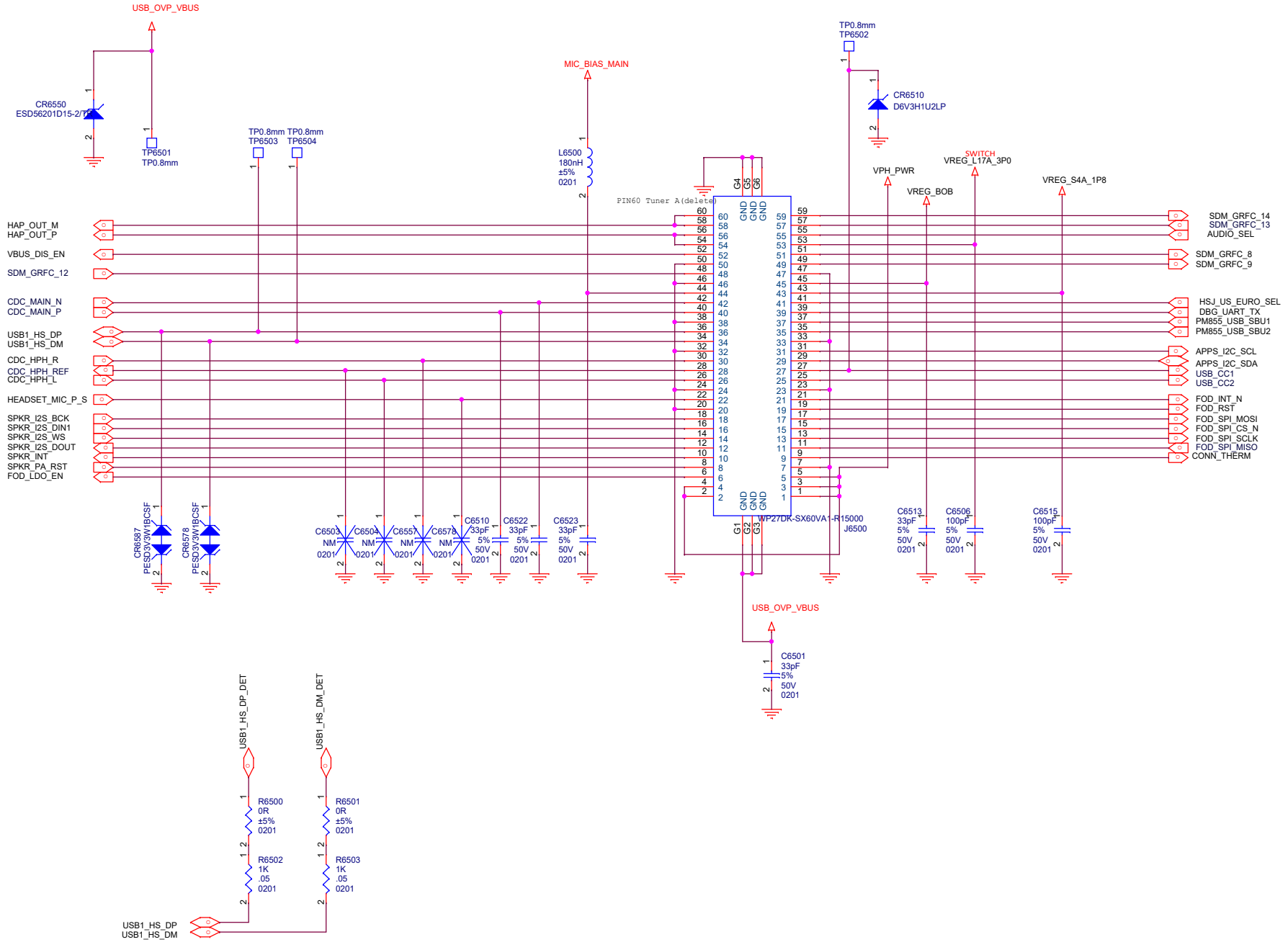

Title	F1 MAIN
Size A3	Document Number BTB
Date: Monday, July 29, 2019	Sheet

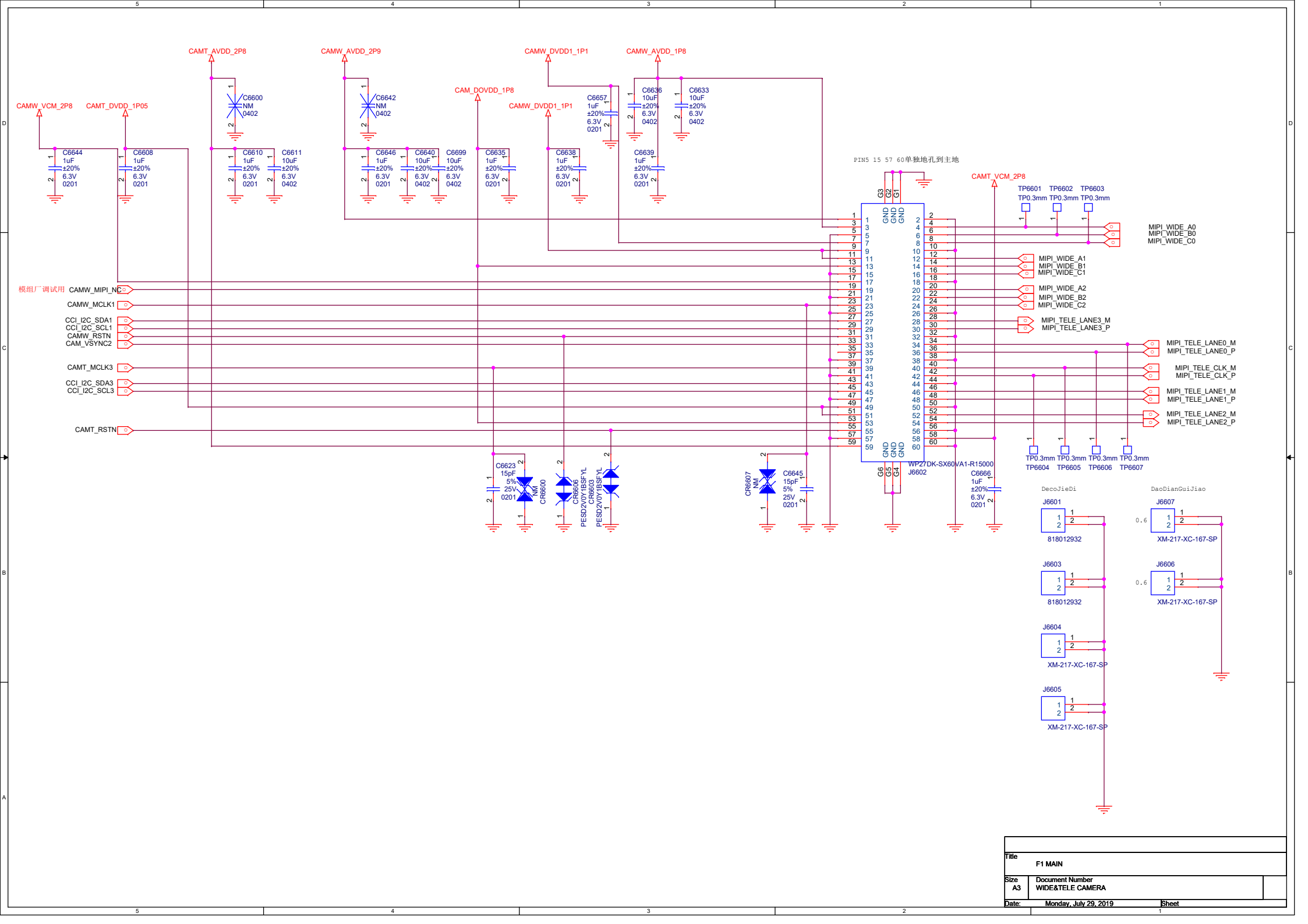
CAMT_AVDD_2P8
CAMW_AVDD_2P9
CAMW_DVDD1_1P1
CAMW_AVDD_1P8
CAMW_VCM_2P8
CAMT_DVDD_1P05
CAM_DOVDD_1P8
CAMW_DVDD1_1P1
C6600 NM 0402
C6642 NM 0402
C6657 1uF ±20% 6.3V 0201
C6636 10uF ±20% 6.3V 0402
C6633 10uF ±20% 6.3V 0402
C6644 1uF ±20% 6.3V 0201
C6608 1uF ±20% 6.3V 0201
C6610 1uF ±20% 6.3V 0201
C6611 10uF ±20% 6.3V 0402
C6646 1uF ±20% 6.3V 0201
C6640 10uF ±20% 6.3V 0402
C6699 10uF ±20% 6.3V 0402
C6635 1uF ±20% 6.3V 0201
C6638 1uF ±20% 6.3V 0201
C6639 1uF ±20% 6.3V 0201
PIN5 15 57 60单独地孔到主地
CAMT_VCM_2P8
TP6601 TP0.3mm
TP6602 TP0.3mm
TP6603 TP0.3mm
MIPI_WIDE_A0
MIPI_WIDE_B0
MIPI_WIDE_C0
MIPI_WIDE_A1
MIPI_WIDE_B1
MIPI_WIDE_C1
MIPI_WIDE_A2
MIPI_WIDE_B2
MIPI_WIDE_C2
MIPI_TELE_LANE3_M
MIPI_TELE_LANE3_P
MIPI_TELE_LANE0_M
MIPI_TELE_LANE0_P
MIPI_TELE_CLK_M
MIPI_TELE_CLK_P
MIPI_TELE_LANE1_M
MIPI_TELE_LANE1_P
MIPI_TELE_LANE2_M
MIPI_TELE_LANE2_P
TP6604 TP0.3mm
TP6605 TP0.3mm
TP6606 TP0.3mm
TP6607 TP0.3mm
模组厂调试用 CAMW_MIPI_NC
CAMW_MCLK1
CCI_I2C_SDA1
CCI_I2C_SCL1
CAMW_RSTN
CAM_VSYNC2
CAMT_MCLK3
CCI_I2C_SDA3
CCI_I2C_SCL3
CAMT_RSTN
C6623 15pF 5% 25V 0201
CR6600 NM
CR6606 PESD2V0Y1BSFYL
CR6603 PESD2V0Y1BSFYL
CR6607 NM
C6645 15pF 5% 25V 0201
C6666 1uF ±20% 6.3V 0201
WP27DK-SX60VA1-R15000
J6602
DecoJieDi
J6601 818012932
J6603 818012932
J6604 XM-217-XC-167-SP
J6605 XM-217-XC-167-SP
DaoDianGuiJiao
J6607 XM-217-XC-167-SP
J6606 XM-217-XC-167-SP
Title F1 MAIN
Size A3
Document Number WIDE&TELE CAMERA
Date: Monday, July 29, 2019
Sheet

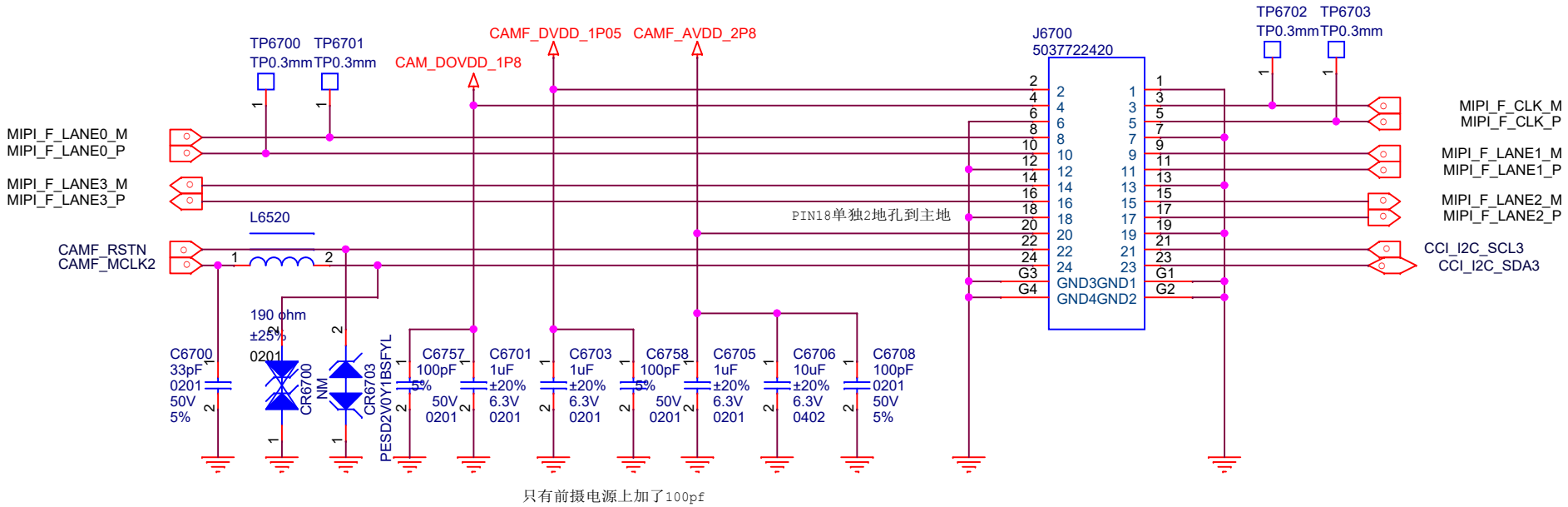

只有前摄电源上加了100pf

Title	F1 MAIN
Size A4	Document Number Reserved(for Analog FM)
Date: Monday, July 29, 2019	Sheet

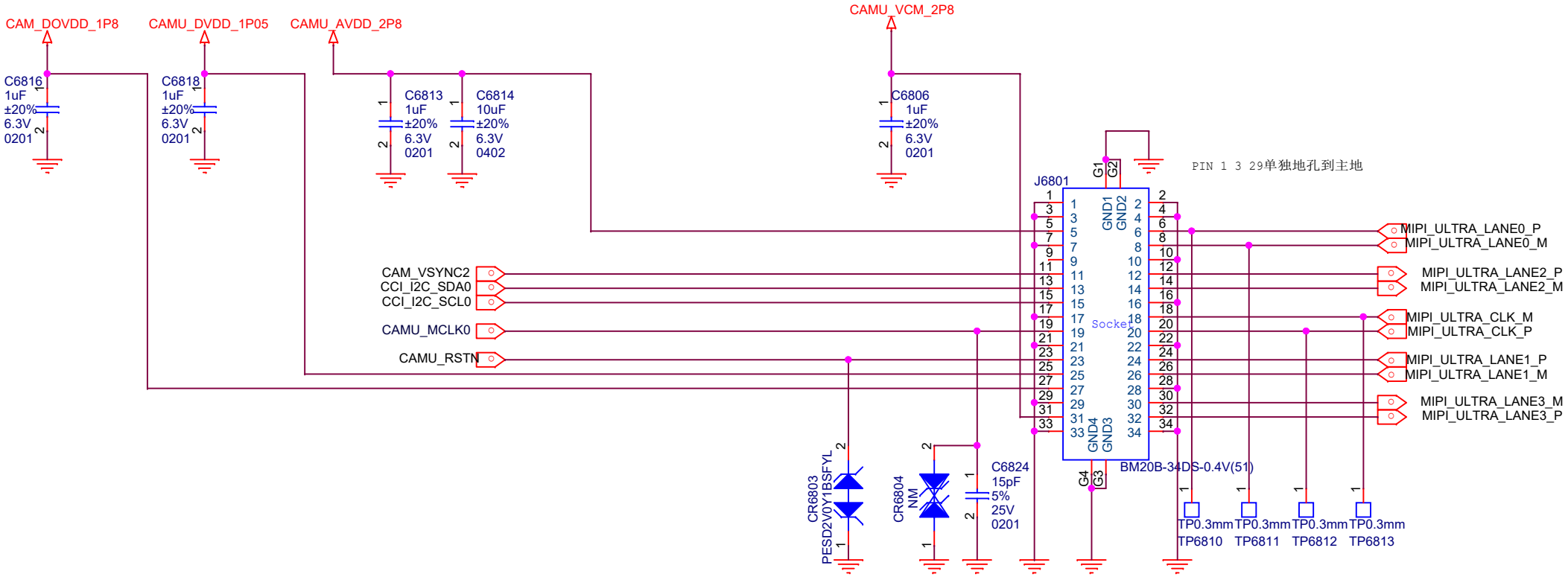

Title	F1 MAIN
Size A4	Document Number ULTRA CAMERA
Date: Monday, July 29, 2019	Sheet

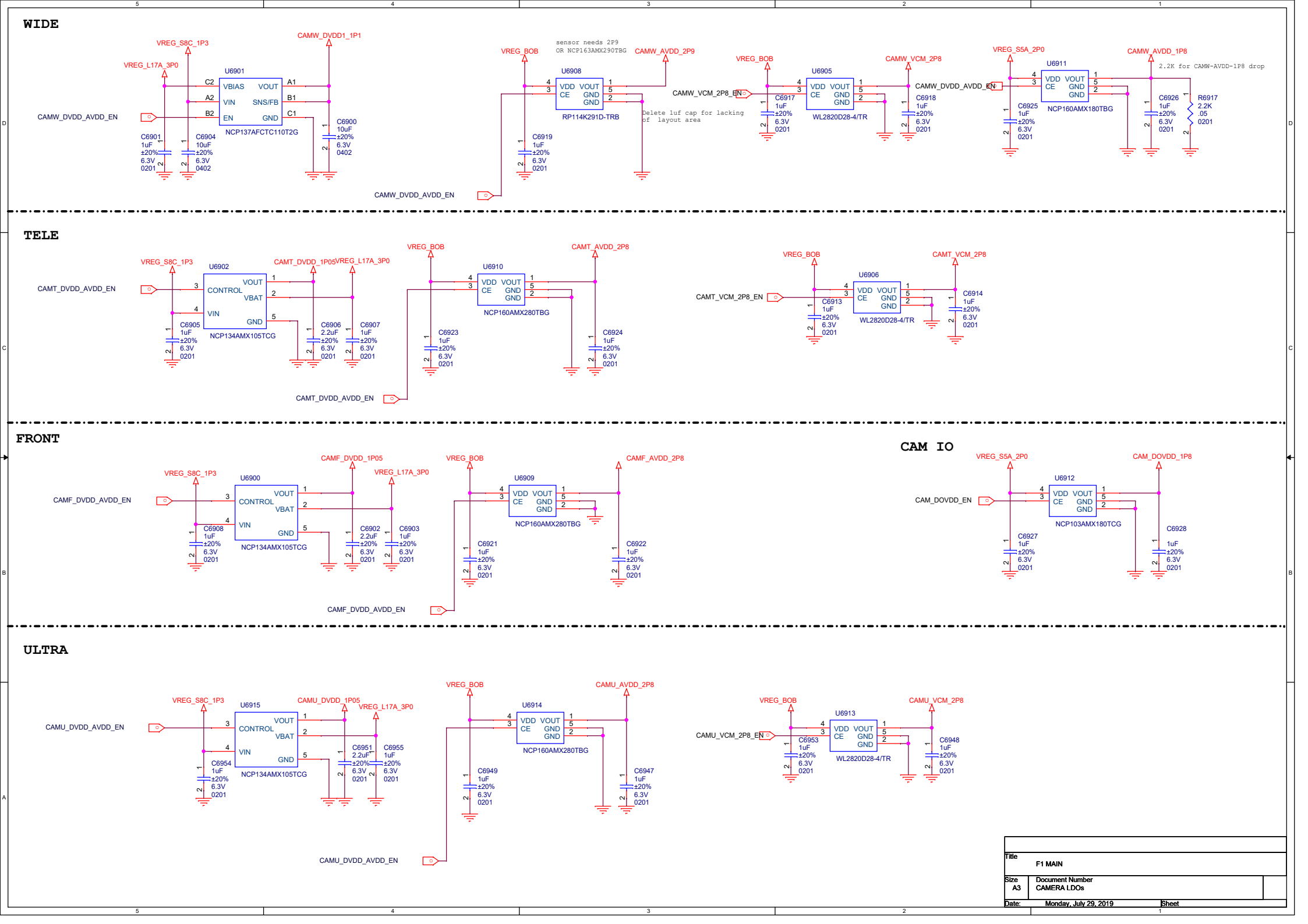
WIDE
VREG_S8C_1P3
VREG_L17A_3P0
CAMW_DVDD1_1P1
U6901
VBIAS
VIN
EN
VOUT
SNS/FB
GND
NCP137AFCTC110T2G
CAMW_DVDD_AVDD_EN
C6901 1uF ±20% 6.3V 0201
C6904 10uF ±20% 6.3V 0402
C6900 10uF ±20% 6.3V 0402
VREG_BOB
sensor needs 2P9
OR NCP163AMX290TBG
CAMW_AVDD_2P9
U6908
VDD VOUT
CE GND
GND
RP114K291D-TRB
Delete 1uf cap for lacking
of layout area
C6919 1uF ±20% 6.3V 0201
CAMW_VCM_2P8_EN
U6905
WL2820D28-4/TR
C6917 1uF ±20% 6.3V 0201
CAMW_VCM_2P8
C6918 1uF ±20% 6.3V 0201
CAMW_DVDD_AVDD_EN
VREG_S5A_2P0
U6911
NCP160AMX180TBG
CAMW_AVDD_1P8
2.2K for CAMW-AVDD-1P8 drop
C6925 1uF ±20% 6.3V 0201
C6926 1uF ±20% 6.3V 0201
R6917 2.2K .05 0201
TELE
VREG_S8C_1P3
U6902
CONTROL
VIN
VOUT
VBAT
GND
NCP134AMX105TCG
CAMT_DVDD_AVDD_EN
C6905 1uF ±20% 6.3V 0201
CAMT_DVDD_1P05
VREG_L17A_3P0
C6906 2.2uF ±20% 6.3V 0201
C6907 1uF ±20% 6.3V 0201
VREG_BOB
U6910
NCP160AMX280TBG
CAMT_AVDD_2P8
C6923 1uF ±20% 6.3V 0201
C6924 1uF ±20% 6.3V 0201
CAMT_DVDD_AVDD_EN
VREG_BOB
U6906
CAMT_VCM_2P8_EN
C6913 1uF ±20% 6.3V 0201
WL2820D28-4/TR
CAMT_VCM_2P8
C6914 1uF ±20% 6.3V 0201
FRONT
VREG_S8C_1P3
U6900
CONTROL
VIN
VOUT
VBAT
GND
NCP134AMX105TCG
CAMF_DVDD_AVDD_EN
C6908 1uF ±20% 6.3V 0201
CAMF_DVDD_1P05
VREG_L17A_3P0
C6902 2.2uF ±20% 6.3V 0201
C6903 1uF ±20% 6.3V 0201
VREG_BOB
U6909
NCP160AMX280TBG
CAMF_AVDD_2P8
C6921 1uF ±20% 6.3V 0201
C6922 1uF ±20% 6.3V 0201
CAMF_DVDD_AVDD_EN
CAM IO
VREG_S5A_2P0
U6912
NCP103AMX180TCG
CAM_DOVDD_EN
C6927 1uF ±20% 6.3V 0201
CAM_DOVDD_1P8
C6928 1uF ±20% 6.3V 0201
ULTRA
VREG_S8C_1P3
U6915
CONTROL
VIN
VOUT
VBAT
GND
NCP134AMX105TCG
CAMU_DVDD_AVDD_EN
C6954 1uF ±20% 6.3V 0201
CAMU_DVDD_1P05
VREG_L17A_3P0
C6951 2.2uF ±20% 6.3V 0201
C6955 1uF ±20% 6.3V 0201
VREG_BOB
U6914
NCP160AMX280TBG
CAMU_AVDD_2P8
C6949 1uF ±20% 6.3V 0201
C6947 1uF ±20% 6.3V 0201
CAMU_DVDD_AVDD_EN
VREG_BOB
U6913
CAMU_VCM_2P8_EN
C6953 1uF ±20% 6.3V 0201
WL2820D28-4/TR
CAMU_VCM_2P8
C6948 1uF ±20% 6.3V 0201
Title
F1 MAIN
Size
A3
Document Number
CAMERA LDOs
Date:
Monday, July 29, 2019
Sheet

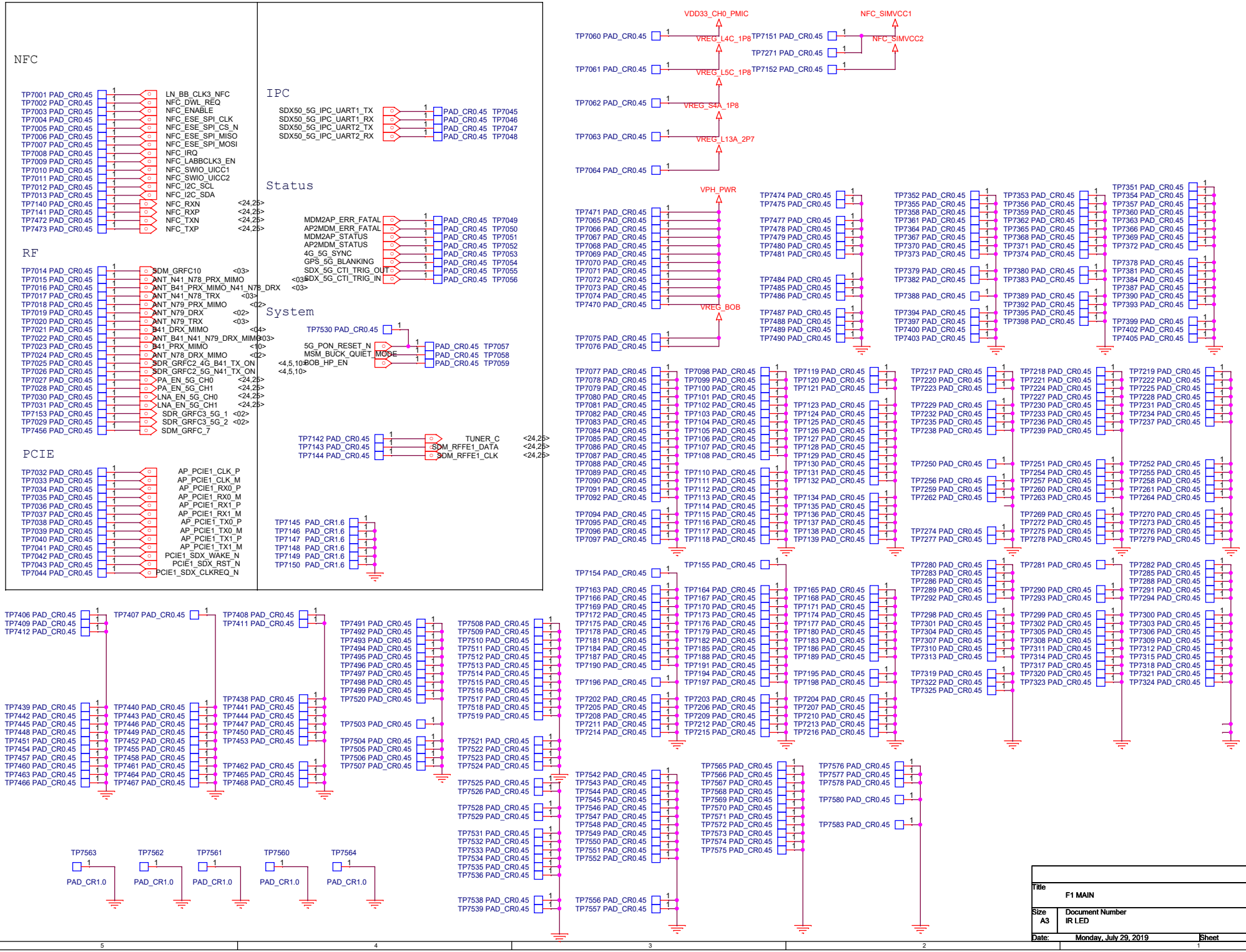
NFC
TP7001 PAD_CR0.45 LN_BB_CLK3_NFC
TP7002 PAD_CR0.45 NFC_DWL_REQ
TP7003 PAD_CR0.45 NFC_ENABLE
TP7004 PAD_CR0.45 NFC_ESE_SPI_CLK
TP7005 PAD_CR0.45 NFC_ESE_SPI_CS_N
TP7006 PAD_CR0.45 NFC_ESE_SPI_MISO
TP7007 PAD_CR0.45 NFC_ESE_SPI_MOSI
TP7008 PAD_CR0.45 NFC_IRQ
TP7009 PAD_CR0.45 NFC_LABBCLK3_EN
TP7010 PAD_CR0.45 NFC_SWIO_UICC1
TP7011 PAD_CR0.45 NFC_SWIO_UICC2
TP7012 PAD_CR0.45 NFC_I2C_SCL
TP7013 PAD_CR0.45 NFC_I2C_SDA
TP7140 PAD_CR0.45 NFC_RXN <24,25>
TP7141 PAD_CR0.45 NFC_RXP <24,25>
TP7472 PAD_CR0.45 NFC_TXN <24,25>
TP7473 PAD_CR0.45 NFC_TXP <24,25>
RF
TP7014 PAD_CR0.45 SDM_GRFC10 <03>
TP7015 PAD_CR0.45 ANT_N41_N78_PRX_MIMO
TP7016 PAD_CR0.45 ANT_B41_PRX_MIMO_N41_N78_DRX <03>
TP7017 PAD_CR0.45 ANT_N41_N78_TRX <03>
TP7018 PAD_CR0.45 ANT_N79_PRX_MIMO <02>
TP7019 PAD_CR0.45 ANT_N79_DRX <02>
TP7020 PAD_CR0.45 ANT_N79_TRX <03>
TP7021 PAD_CR0.45 B41_DRX_MIMO <04>
TP7022 PAD_CR0.45 ANT_B41_N41_N79_DRX_MIMO <03>
TP7023 PAD_CR0.45 B41_PRX_MIMO <10>
TP7024 PAD_CR0.45 ANT_N78_DRX_MIMO <02>
TP7025 PAD_CR0.45 SDR_GRFC2_4G_B41_TX_ON <4,5,10>
TP7026 PAD_CR0.45 SDR_GRFC2_5G_N41_TX_ON <4,5,10>
TP7027 PAD_CR0.45 PA_EN_5G_CH0 <24,25>
TP7028 PAD_CR0.45 PA_EN_5G_CH1 <24,25>
TP7030 PAD_CR0.45 LNA_EN_5G_CH0 <24,25>
TP7031 PAD_CR0.45 LNA_EN_5G_CH1 <24,25>
TP7153 PAD_CR0.45 SDR_GRFC3_5G_1 <02>
TP7029 PAD_CR0.45 SDR_GRFC3_5G_2 <02>
TP7456 PAD_CR0.45 SDM_GRFC_7
PCIE
TP7032 PAD_CR0.45 AP_PCIE1_CLK_P
TP7033 PAD_CR0.45 AP_PCIE1_CLK_M
TP7034 PAD_CR0.45 AP_PCIE1_RX0_P
TP7035 PAD_CR0.45 AP_PCIE1_RX0_M
TP7036 PAD_CR0.45 AP_PCIE1_RX1_P
TP7037 PAD_CR0.45 AP_PCIE1_RX1_M
TP7038 PAD_CR0.45 AP_PCIE1_TX0_P
TP7039 PAD_CR0.45 AP_PCIE1_TX0_M
TP7040 PAD_CR0.45 AP_PCIE1_TX1_P
TP7041 PAD_CR0.45 AP_PCIE1_TX1_M
TP7042 PAD_CR0.45 PCIE1_SDX_WAKE_N
TP7043 PAD_CR0.45 PCIE1_SDX_RST_N
TP7044 PAD_CR0.45 PCIE1_SDX_CLKREQ_N
IPC
SDX50_5G_IPC_UART1_TX PAD_CR0.45 TP7045
SDX50_5G_IPC_UART1_RX PAD_CR0.45 TP7046
SDX50_5G_IPC_UART2_TX PAD_CR0.45 TP7047
SDX50_5G_IPC_UART2_RX PAD_CR0.45 TP7048
Status
MDM2AP_ERR_FATAL PAD_CR0.45 TP7049
AP2MDM_ERR_FATAL PAD_CR0.45 TP7050
MDM2AP_STATUS PAD_CR0.45 TP7051
AP2MDM_STATUS PAD_CR0.45 TP7052
4G_5G_SYNC PAD_CR0.45 TP7053
GPS_5G_BLANKING PAD_CR0.45 TP7054
SDX_5G_CTI_TRIG_OUT PAD_CR0.45 TP7055
<03> SDX_5G_CTI_TRIG_IN PAD_CR0.45 TP7056
System
TP7530 PAD_CR0.45
5G_PON_RESET_N PAD_CR0.45 TP7057
MSM_BUCK_QUIET_MODE PAD_CR0.45 TP7058
BOB_HP_EN PAD_CR0.45 TP7059
TP7142 PAD_CR0.45 TUNER_C <24,25>
TP7143 PAD_CR0.45 SDM_RFFE1_DATA <24,25>
TP7144 PAD_CR0.45 SDM_RFFE1_CLK <24,25>
TP7145 PAD_CR1.6
TP7146 PAD_CR1.6
TP7147 PAD_CR1.6
TP7148 PAD_CR1.6
TP7149 PAD_CR1.6
TP7150 PAD_CR1.6
VDD33_CH0_PMIC
NFC_SIMVCC1
TP7060 PAD_CR0.45 VREG_L4C_1P8
TP7151 PAD_CR0.45
TP7271 PAD_CR0.45
NFC_SIMVCC2
TP7061 PAD_CR0.45 VREG_L5C_1P8
TP7152 PAD_CR0.45
TP7062 PAD_CR0.45 VREG_S4A_1P8
TP7063 PAD_CR0.45 VREG_L13A_2P7
TP7064 PAD_CR0.45
VPH_PWR
TP7471 PAD_CR0.45
TP7065 PAD_CR0.45
TP7066 PAD_CR0.45
TP7067 PAD_CR0.45
TP7068 PAD_CR0.45
TP7069 PAD_CR0.45
TP7070 PAD_CR0.45
TP7071 PAD_CR0.45
TP7072 PAD_CR0.45
TP7073 PAD_CR0.45
TP7074 PAD_CR0.45
TP7470 PAD_CR0.45
VREG_BOB
TP7075 PAD_CR0.45
TP7076 PAD_CR0.45
TP7474 PAD_CR0.45
TP7475 PAD_CR0.45
TP7477 PAD_CR0.45
TP7478 PAD_CR0.45
TP7479 PAD_CR0.45
TP7480 PAD_CR0.45
TP7481 PAD_CR0.45
TP7484 PAD_CR0.45
TP7485 PAD_CR0.45
TP7486 PAD_CR0.45
TP7487 PAD_CR0.45
TP7488 PAD_CR0.45
TP7489 PAD_CR0.45
TP7490 PAD_CR0.45
TP7352 PAD_CR0.45
TP7355 PAD_CR0.45
TP7358 PAD_CR0.45
TP7361 PAD_CR0.45
TP7364 PAD_CR0.45
TP7367 PAD_CR0.45
TP7370 PAD_CR0.45
TP7373 PAD_CR0.45
TP7379 PAD_CR0.45
TP7382 PAD_CR0.45
TP7388 PAD_CR0.45
TP7394 PAD_CR0.45
TP7397 PAD_CR0.45
TP7400 PAD_CR0.45
TP7403 PAD_CR0.45
TP7353 PAD_CR0.45
TP7356 PAD_CR0.45
TP7359 PAD_CR0.45
TP7362 PAD_CR0.45
TP7365 PAD_CR0.45
TP7368 PAD_CR0.45
TP7371 PAD_CR0.45
TP7374 PAD_CR0.45
TP7380 PAD_CR0.45
TP7383 PAD_CR0.45
TP7389 PAD_CR0.45
TP7392 PAD_CR0.45
TP7395 PAD_CR0.45
TP7398 PAD_CR0.45
TP7351 PAD_CR0.45
TP7354 PAD_CR0.45
TP7357 PAD_CR0.45
TP7360 PAD_CR0.45
TP7363 PAD_CR0.45
TP7366 PAD_CR0.45
TP7369 PAD_CR0.45
TP7372 PAD_CR0.45
TP7378 PAD_CR0.45
TP7381 PAD_CR0.45
TP7384 PAD_CR0.45
TP7387 PAD_CR0.45
TP7390 PAD_CR0.45
TP7393 PAD_CR0.45
TP7399 PAD_CR0.45
TP7402 PAD_CR0.45
TP7405 PAD_CR0.45
TP7077 PAD_CR0.45
TP7078 PAD_CR0.45
TP7079 PAD_CR0.45
TP7080 PAD_CR0.45
TP7081 PAD_CR0.45
TP7082 PAD_CR0.45
TP7083 PAD_CR0.45
TP7084 PAD_CR0.45
TP7085 PAD_CR0.45
TP7086 PAD_CR0.45
TP7087 PAD_CR0.45
TP7088 PAD_CR0.45
TP7089 PAD_CR0.45
TP7090 PAD_CR0.45
TP7091 PAD_CR0.45
TP7092 PAD_CR0.45
TP7094 PAD_CR0.45
TP7095 PAD_CR0.45
TP7096 PAD_CR0.45
TP7097 PAD_CR0.45
TP7098 PAD_CR0.45
TP7099 PAD_CR0.45
TP7100 PAD_CR0.45
TP7101 PAD_CR0.45
TP7102 PAD_CR0.45
TP7103 PAD_CR0.45
TP7104 PAD_CR0.45
TP7105 PAD_CR0.45
TP7106 PAD_CR0.45
TP7107 PAD_CR0.45
TP7108 PAD_CR0.45
TP7110 PAD_CR0.45
TP7111 PAD_CR0.45
TP7112 PAD_CR0.45
TP7113 PAD_CR0.45
TP7114 PAD_CR0.45
TP7115 PAD_CR0.45
TP7116 PAD_CR0.45
TP7117 PAD_CR0.45
TP7118 PAD_CR0.45
TP7119 PAD_CR0.45
TP7120 PAD_CR0.45
TP7121 PAD_CR0.45
TP7123 PAD_CR0.45
TP7124 PAD_CR0.45
TP7125 PAD_CR0.45
TP7126 PAD_CR0.45
TP7127 PAD_CR0.45
TP7128 PAD_CR0.45
TP7129 PAD_CR0.45
TP7130 PAD_CR0.45
TP7131 PAD_CR0.45
TP7132 PAD_CR0.45
TP7134 PAD_CR0.45
TP7135 PAD_CR0.45
TP7136 PAD_CR0.45
TP7137 PAD_CR0.45
TP7138 PAD_CR0.45
TP7139 PAD_CR0.45
TP7217 PAD_CR0.45
TP7220 PAD_CR0.45
TP7223 PAD_CR0.45
TP7229 PAD_CR0.45
TP7232 PAD_CR0.45
TP7235 PAD_CR0.45
TP7238 PAD_CR0.45
TP7250 PAD_CR0.45
TP7256 PAD_CR0.45
TP7259 PAD_CR0.45
TP7262 PAD_CR0.45
TP7274 PAD_CR0.45
TP7277 PAD_CR0.45
TP7218 PAD_CR0.45
TP7221 PAD_CR0.45
TP7224 PAD_CR0.45
TP7227 PAD_CR0.45
TP7230 PAD_CR0.45
TP7233 PAD_CR0.45
TP7236 PAD_CR0.45
TP7239 PAD_CR0.45
TP7251 PAD_CR0.45
TP7254 PAD_CR0.45
TP7257 PAD_CR0.45
TP7260 PAD_CR0.45
TP7263 PAD_CR0.45
TP7269 PAD_CR0.45
TP7272 PAD_CR0.45
TP7275 PAD_CR0.45
TP7278 PAD_CR0.45
TP7219 PAD_CR0.45
TP7222 PAD_CR0.45
TP7225 PAD_CR0.45
TP7228 PAD_CR0.45
TP7231 PAD_CR0.45
TP7234 PAD_CR0.45
TP7237 PAD_CR0.45
TP7252 PAD_CR0.45
TP7255 PAD_CR0.45
TP7258 PAD_CR0.45
TP7261 PAD_CR0.45
TP7264 PAD_CR0.45
TP7270 PAD_CR0.45
TP7273 PAD_CR0.45
TP7276 PAD_CR0.45
TP7279 PAD_CR0.45
TP7154 PAD_CR0.45
TP7155 PAD_CR0.45
TP7163 PAD_CR0.45
TP7166 PAD_CR0.45
TP7169 PAD_CR0.45
TP7172 PAD_CR0.45
TP7175 PAD_CR0.45
TP7178 PAD_CR0.45
TP7181 PAD_CR0.45
TP7184 PAD_CR0.45
TP7187 PAD_CR0.45
TP7190 PAD_CR0.45
TP7196 PAD_CR0.45
TP7202 PAD_CR0.45
TP7205 PAD_CR0.45
TP7208 PAD_CR0.45
TP7211 PAD_CR0.45
TP7214 PAD_CR0.45
TP7164 PAD_CR0.45
TP7167 PAD_CR0.45
TP7170 PAD_CR0.45
TP7173 PAD_CR0.45
TP7176 PAD_CR0.45
TP7179 PAD_CR0.45
TP7182 PAD_CR0.45
TP7185 PAD_CR0.45
TP7188 PAD_CR0.45
TP7191 PAD_CR0.45
TP7194 PAD_CR0.45
TP7197 PAD_CR0.45
TP7203 PAD_CR0.45
TP7206 PAD_CR0.45
TP7209 PAD_CR0.45
TP7212 PAD_CR0.45
TP7215 PAD_CR0.45
TP7165 PAD_CR0.45
TP7168 PAD_CR0.45
TP7171 PAD_CR0.45
TP7174 PAD_CR0.45
TP7177 PAD_CR0.45
TP7180 PAD_CR0.45
TP7183 PAD_CR0.45
TP7186 PAD_CR0.45
TP7189 PAD_CR0.45
TP7195 PAD_CR0.45
TP7198 PAD_CR0.45
TP7204 PAD_CR0.45
TP7207 PAD_CR0.45
TP7210 PAD_CR0.45
TP7213 PAD_CR0.45
TP7216 PAD_CR0.45
TP7280 PAD_CR0.45
TP7283 PAD_CR0.45
TP7286 PAD_CR0.45
TP7289 PAD_CR0.45
TP7292 PAD_CR0.45
TP7298 PAD_CR0.45
TP7301 PAD_CR0.45
TP7304 PAD_CR0.45
TP7307 PAD_CR0.45
TP7310 PAD_CR0.45
TP7313 PAD_CR0.45
TP7319 PAD_CR0.45
TP7322 PAD_CR0.45
TP7325 PAD_CR0.45
TP7281 PAD_CR0.45
TP7290 PAD_CR0.45
TP7293 PAD_CR0.45
TP7299 PAD_CR0.45
TP7302 PAD_CR0.45
TP7305 PAD_CR0.45
TP7308 PAD_CR0.45
TP7311 PAD_CR0.45
TP7314 PAD_CR0.45
TP7317 PAD_CR0.45
TP7320 PAD_CR0.45
TP7323 PAD_CR0.45
TP7282 PAD_CR0.45
TP7285 PAD_CR0.45
TP7288 PAD_CR0.45
TP7291 PAD_CR0.45
TP7294 PAD_CR0.45
TP7300 PAD_CR0.45
TP7303 PAD_CR0.45
TP7306 PAD_CR0.45
TP7309 PAD_CR0.45
TP7312 PAD_CR0.45
TP7315 PAD_CR0.45
TP7318 PAD_CR0.45
TP7321 PAD_CR0.45
TP7324 PAD_CR0.45
TP7406 PAD_CR0.45
TP7409 PAD_CR0.45
TP7412 PAD_CR0.45
TP7407 PAD_CR0.45
TP7408 PAD_CR0.45
TP7411 PAD_CR0.45
TP7439 PAD_CR0.45
TP7442 PAD_CR0.45
TP7445 PAD_CR0.45
TP7448 PAD_CR0.45
TP7451 PAD_CR0.45
TP7454 PAD_CR0.45
TP7457 PAD_CR0.45
TP7460 PAD_CR0.45
TP7463 PAD_CR0.45
TP7466 PAD_CR0.45
TP7440 PAD_CR0.45
TP7443 PAD_CR0.45
TP7446 PAD_CR0.45
TP7449 PAD_CR0.45
TP7452 PAD_CR0.45
TP7455 PAD_CR0.45
TP7458 PAD_CR0.45
TP7461 PAD_CR0.45
TP7464 PAD_CR0.45
TP7467 PAD_CR0.45
TP7438 PAD_CR0.45
TP7441 PAD_CR0.45
TP7444 PAD_CR0.45
TP7447 PAD_CR0.45
TP7450 PAD_CR0.45
TP7453 PAD_CR0.45
TP7462 PAD_CR0.45
TP7465 PAD_CR0.45
TP7468 PAD_CR0.45
TP7491 PAD_CR0.45
TP7492 PAD_CR0.45
TP7493 PAD_CR0.45
TP7494 PAD_CR0.45
TP7495 PAD_CR0.45
TP7496 PAD_CR0.45
TP7497 PAD_CR0.45
TP7498 PAD_CR0.45
TP7499 PAD_CR0.45
TP7520 PAD_CR0.45
TP7503 PAD_CR0.45
TP7504 PAD_CR0.45
TP7505 PAD_CR0.45
TP7506 PAD_CR0.45
TP7507 PAD_CR0.45
TP7508 PAD_CR0.45
TP7509 PAD_CR0.45
TP7510 PAD_CR0.45
TP7511 PAD_CR0.45
TP7512 PAD_CR0.45
TP7513 PAD_CR0.45
TP7514 PAD_CR0.45
TP7515 PAD_CR0.45
TP7516 PAD_CR0.45
TP7517 PAD_CR0.45
TP7518 PAD_CR0.45
TP7519 PAD_CR0.45
TP7521 PAD_CR0.45
TP7522 PAD_CR0.45
TP7523 PAD_CR0.45
TP7524 PAD_CR0.45
TP7525 PAD_CR0.45
TP7526 PAD_CR0.45
TP7528 PAD_CR0.45
TP7529 PAD_CR0.45
TP7531 PAD_CR0.45
TP7532 PAD_CR0.45
TP7533 PAD_CR0.45
TP7534 PAD_CR0.45
TP7535 PAD_CR0.45
TP7536 PAD_CR0.45
TP7538 PAD_CR0.45
TP7539 PAD_CR0.45
TP7542 PAD_CR0.45
TP7543 PAD_CR0.45
TP7544 PAD_CR0.45
TP7545 PAD_CR0.45
TP7546 PAD_CR0.45
TP7547 PAD_CR0.45
TP7548 PAD_CR0.45
TP7549 PAD_CR0.45
TP7550 PAD_CR0.45
TP7551 PAD_CR0.45
TP7552 PAD_CR0.45
TP7556 PAD_CR0.45
TP7557 PAD_CR0.45
TP7565 PAD_CR0.45
TP7566 PAD_CR0.45
TP7567 PAD_CR0.45
TP7568 PAD_CR0.45
TP7569 PAD_CR0.45
TP7570 PAD_CR0.45
TP7571 PAD_CR0.45
TP7572 PAD_CR0.45
TP7573 PAD_CR0.45
TP7574 PAD_CR0.45
TP7575 PAD_CR0.45
TP7576 PAD_CR0.45
TP7577 PAD_CR0.45
TP7578 PAD_CR0.45
TP7580 PAD_CR0.45
TP7583 PAD_CR0.45
TP7563 PAD_CR1.0
TP7562 PAD_CR1.0
TP7561 PAD_CR1.0
TP7560 PAD_CR1.0
TP7564 PAD_CR1.0
Title
F1 MAIN
Size A3
Document Number
IR LED
Date: Monday, July 29, 2019
Sheet